National Clinical Guideline Centre

Document information (i.e. version number etc)

Hepatitis B (chronic)

Appendices H - 0

Clinical Guideline <…>

Methods, evidence and recommendations

January 2013

Draft for Consultation

Commissioned by the National Institute for Health and Clinical Excellence

Disclaimer
Healthcare professionals are expected to take NICE clinical guidelines fully into account when exercising their clinical judgement. However, the guidance does not override the responsibility of healthcare professionals to make decisions appropriate to the circumstances of each patient, in consultation with the patient and/or their guardian or carer.

Copyright
<Please insert your copyright statement - one line of text entry only>

Funding
<Please insert your statement here

Contents

Appendix H: Cost-effectiveness analysis – Antiviral therapy for decompensated HBV cirrhosis 6
Appendix I: Cost-effectiveness analysis – Treatment of patients with HBeAg positive CHB 37
Appendix J: Network meta analysis (NMA) of interventions in the pharmacological treatment of chronic hepatitis B for adults 84
Appendix K: Research recommendations 150
Appendix L: Excluded clinical studies 151
Appendix M: Excluded economic studies 171
Appendix N: Quality Assessment Checklists 175
Appendix O: Diagnostics – 2x2 tables 246

Appendix H: Cost-effectiveness analysis – Antiviral therapy for decompensated HBV cirrhosis

H.1 Introduction

Hepatitis B is a leading cause of cirrhosis and hepatocellular carcinoma (HCC). Over 5 years, cirrhotic patients have a 15% - 20% probability of decompensation. From this progressive state, prognosis is poor; 5 year survival of people with decompensated cirrhosis is only 14% to 35%.

Treatment with interferon is contraindicated in this population. Current approved nucleos(t)ide treatments include: lamivudine, adefovir, entecavir, tenofovir and a combination of emtricitabine and tenofovir (Tenofovir + emtricitabine). A major limitation of nucleos(t)ide analogues is the selection of HBV resistant variants, which can lead to a rebound in HBV replication and exacerbation of HBV-related disease. Antiviral resistance is now considered the single most important factor in treatment failure in CHB. The same HBV polymerase gene variants that mediate HBV resistance are known to confer cross-resistance to other nucleos(t)ides.

In cases of resistance, an appropriate rescue therapy should be initiated. This may mean that the patient is switched to a complimentary drug with a high barrier to resistance. A relatively recent concept in the management of antiviral resistance is the superiority of add-on therapy rather than switching as a means of preventing the development of subsequent multidrug resistant isolates. Which initial and rescue therapy, and whether rescue therapy should be given alone or in combination, is an issue of considerable uncertainty. Each alternative is associated with different benefits, side effects and costs.

Currently, the results of two randomised controlled trials in people with decompensated cirrhosis due to CHB have been reported (Liaw 2011[51] and Liaw 2011A[52]). Together they show that Tenofovir + emtricitabine is the most effective treatment for reducing mortality and progression to HCC, but the least effective at preventing progression to liver transplant. Tenofovir is the next most effective at reducing mortality, but less effective than entecavir at reducing progression to HCC and liver transplant. These results were reported over 48 weeks. What the overall impact of these effects is on the disease progression and quality of life, and whether the increased cost of Tenofovir + emtricitabine is represents a cost effective of NHS resources, remains to be determined. The aim of this analysis was to evaluate the cost-effectiveness of antiviral treatment in people with decompensated cirrhosis.

H.2 Methods

H.2.1 Model overview

H.2.1.1 Population

The model evaluated a hypothetical cohort of people with decompensated cirrhosis due to CHB. In accordance with the studies used to inform evidence of effectiveness (Table 7), the cohort had an average age of 52, 78% male, and 47% were HBeAg positive. Approximately 38% of the population had been previously exposed to lamivudine and 21% had previous adefovir exposure, this was important due to the presence of resistance.

H.2.1.2 Comparators

Patients entering the model received one of ten interventional strategies (Table 2). Interferon was not included as a comparator as it is contraindicated in people with cirrhosis. Lamivudine was not included because no randomised evidence of its effectiveness in this population was

identified by the systematic review. There are several factors which influence the selection of appropriate second line treatment options. Based on *in vitro* and *in vivo* studies, it is well recognised that resistance to lamivudine confers cross-resistance to other L-nucleosides and reduces sensitivity to entecavir (Table 1). Conversely, mutants that are resistant to adefovir generally remain sensitive to L-nucleosides and entecavir (Table 1). When patients are treated sequentially with drugs that have overlapping resistance profiles, the second therapy is not only less effective, but may also lead to the selection of multidrug resistance.[92] Another factor guiding the selection of appropriate treatment alternatives is that certain drugs may cause renal toxicity when used in combination. Therefore, all sequences and combinations of treatments other than those in which patients would be resistant to the second-line agent before starting treatment or would be at risk of toxicity were included in the analysis. A list all included treatment sequences is presented in Table 2. Table 3 includes a list of all excluded comparators, along with the reason for its exclusion.

Table 1: Antiviral cross resistance in CHB – From Zoulim 2012[92] and Zoulim & Locarnini 2009[91]

Pathway	Amino acid substitution	LMV	ETV	ADV	TFV
	Wild type	S	S	S	S
L-nucleoside (LMV)	M204I/V	R	I	S	S
Acyclic phosphate (ADV)	N236T	S	S	R	I
Shared (LMV, ADV)	A181T/V	R	S	R	I
Double (ADV, TFV)	A181T/V + N236T	R	S	R	R
D-Cyclopentane (ETV)	L180M + M204V/I ± I169 ± T184	R	R	S	S

I = intermediate sensitivity; R = resistant; S = sensitive. Telbivudine has been omitted from the original table as it is not a comparator in our model (as per TA 154).

Table 2: Comparators included in the model

1	No treatment
2	Adefovir → Tenofovir
3	Adefovir → Entecavir
4	Adefovir → Tenofovir + Emtricitabine
5	Entecavir → Adefovir
6	Entecavir → Tenofovir
7	Entecavir → Entecavir + Tenofovir
8	Entecavir → Tenofovir + Emtricitabine
9	Tenofovir → Entecavir
10	Tenofovir + Emtricitabine → Entecavir

Table 3: Excluded comparators

#	Sequential drug therapy (add-on or monotherapy)	Reason for exclusion
1	Tenofovir → Adefovir	Cross resistant *
2	Adefovir → Adefovir + Tenofovir	Toxic
3	Tenofovir → Tenofovir + Adefovir	Toxic
4	Entecavir → Entecavir + Adefovir	Cross resistant

** Although Tenofovir resistance has not been described, the GDG considered these to be instances of likely cross resistance because Adefovir is from the same group of drugs.*

H.2.1.3 Time horizon, perspective, discount rates used

The analysis was undertaken from the perspective of the NHS and personal social services, in accordance with NICE guidelines methodology.[63] relevant costs consisted of the cost of each antiviral drug, monitoring during therapy, and costs associated with progressive liver disease. All costs are reported in 2010/11 British pounds. The primary measure of outcome is the quality-adjusted life-year (QALY). The model was evaluated over a lifetime horizon with both costs and QALYs discounted at a rate of 3.5% per year. Alternative discount rates of 1.5% for QALYs and 3.5% for costs were explored in sensitivity analysis.

H.2.2 Approach to modelling and model structure

A Markov model was developed using TreeAge Pro 2009 [81] to illustrate the varying stages of disease severity associated with cirrhosis due to CHB. Patients entered the model with decompensated cirrhosis and could transition between states according to the model structure defined in Figure 1: Markov State diagram

. Baseline transition rates between each health state were based on models reported by Dakin 2010[16], Wong 201[85], Shepherd 2006[76], and Kanwal 2006[39], and validated by the GDG. Patients entering the model received one of the Nucleoside Analogues treatment strategies described in Table 2. Data used to inform treatment effects on transitions from decompensated cirrhosis to death, liver transplant and HCC was collected from the systematic clinical review. Progression from compensated to decompensated was assumed to be irreversible without treatment, but occurred at a constant background rate with treatment (see section H.2.3.3).

Previous exposure to lamivudine (LAM) and adefovir (ADV) therapy was reported by the papers included in the clinical review (Table 7). 35% of the baseline cohort was reported to be LAM resistant. ADV resistance was not reported; based on the proportion of people with previous ADV exposure, it was assumed that 20% of the cohort were ADV resistant. In order to account for heterogeneous resistance profiles within the baseline population cohort, patients with LAM resistance who were assigned to a strategy in which entecavir was the first line therapy were directed to the second line therapy of that strategy. For example, 35% of the cohort entering treatment strategy 6 was prescribed tenofovir rather than entecavir as a first line therapy. Likewise, patients with previous ADV resistance entering strategies in which ADV or TDV was the first line therapy were directly assigned to second line treatment.

If patients developed resistance to the second line therapy, they were assumed to continue to accrue the cost of the drug, but not the benefit. In cases where nucleos(t)ides were used in combination, it was assumed that the probability of disease progression was equal to that of the most effective component of that combination but the cost remains as the combined cost of the two drugs. Resistance and withdrawal were assumed to be equivalent to the lowest rate of the two drugs.

Figure 1: Markov State diagram

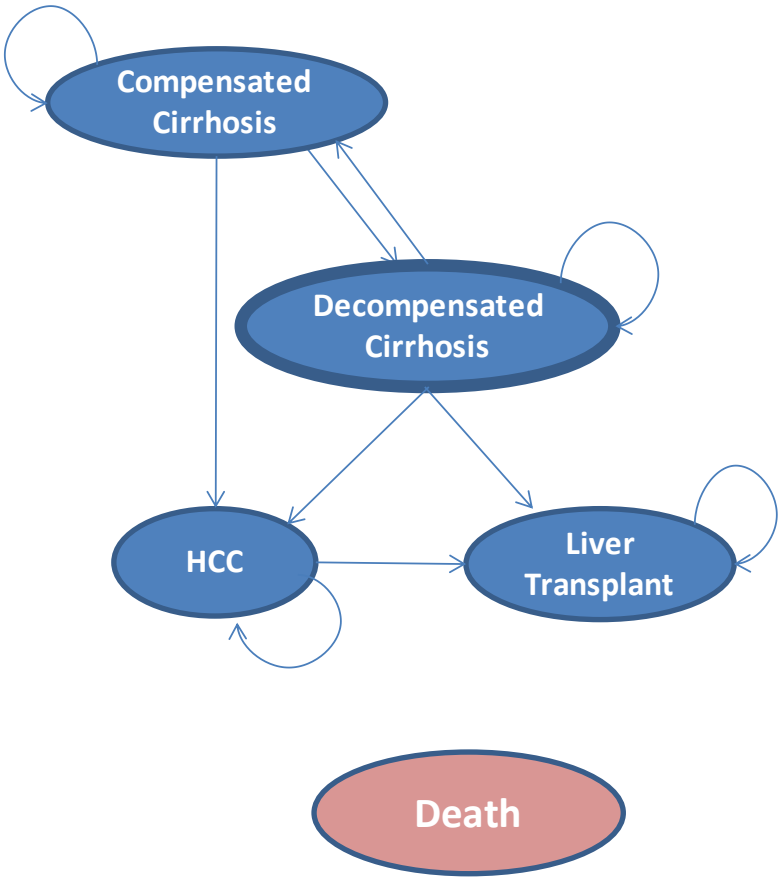

Source/Note: Markov state diagram. Patients entered the model with decompensated cirrhosis. During each 1 year cycle through the model, patients either remained in their assigned health state (recursive arrow) or progressed to a new health state (straight arrow). Patients with compensated cirrhosis could develop decompensated cirrhosis (including variceal haemorrhage, ascites, or encephalopathy). Patients with decompensated cirrhosis could then return to compensated cirrhosis and decompensate a second time. This subsequent rate of decompensation was higher than the initial rate. Hepatocellular carcinoma could develop at either stage of cirrhosis. Patients with either decompensated cirrhosis or hepatocellular carcinoma were eligible to receive liver transplantation. Patients receiving liver transplant remained in that state, called 'post liver transplant' in all years subsequent to the year in which the transplant took place, from which the only transition was death.

H.2.2.1 Uncertainty

The model was built probabilistically to take account of the uncertainty surrounding each input parameter. In order to characterise uncertainty, a probability distribution was defined for each parameter based on error estimates from the data sources (e.g. standard errors or confidence intervals). The way in which distributions are defined reflects the nature of the data (Table 4). When the model was run, a value for each input was randomly selected from its respective distribution. The model was run repeatedly (10 000 times) to obtain mean cost and QALY values.

Various sensitivity analyses were also undertaken to test the robustness of model assumptions and data sources. In these analyses, one or more inputs were changed and the analysis was rerun in order to evaluate the impact of these changes on the results of the model.

Table 4: Distributions used in probabilistic cost-utility analysis

Parameter	Type of distribution	Properties of distribution	Parameters for the distributions
Relative risk & odds ratios	Lognormal	Bound at zero	Log mean (LM) = Ln(RR) Log standard deviation (LSD) = Ln(Upper CI – Lower CI)

Parameter	Type of distribution	Properties of distribution	Parameters for the distributions
			1.96 x 2
Compliance to exercise (based on expert opinion)	Triangular	Minimum, mode, and maximum values	Min = minimum value Likeliest = mean Max = maximum value
Costs	Gamma	Bound between zero and infinity	α = (mean/standard error of the mean)^2 γ = mean/standard error of the mean^2
Probabilities (& mean baseline utility)	Beta	Bound between zero and one	α = events β = sample size - α

H.2.3 Model inputs

H.2.3.1 Summary table of model inputs

Model inputs were based on clinical evidence identified in the systematic review undertaken for the guideline, supplemented by additional data sources as required. Model inputs were validated with clinical members of the GDG. A summary of the model inputs used in the base-case (primary) analysis is provided in Table 5 below. More details about sources, calculations, and rationale for selection can be found in the sections following this summary table.

Table 5: Summary of base-case model inputs

Input	Data	Source
Comparators	1. No treatment 2. Adefovir → Tenofovir 3. Adefovir → Entecavir 4. Adefovir → Tenofovir + Emtricitabine 5. Entecavir → Adefovir 6. Entecavir → Tenofovir 7. Entecavir → Entecavir + Tenofovir 9. Entecavir → Tenofovir + Emtricitabine 10. Tenofovir → Entecavir 11. Tenofovir + Emtricitabine → Entecavir	Based on comparators included in clinical trials identified in the systematic review
Population	People with decompensated cirrhosis due to CHB who are suitable for antiviral therapy	GDG consensus
Subgroups	None	
Initial cohort settings	Age: 52 Male: 78% HBeAg positive: 47% Previous LAM exposure: 38%[¥] Baseline LAM resistance: 35%[¥] Previous ADV exposure: 21%[¥] Baseline ADV resistance: 5%[Δ]	The average age, sex, and % of HBeAg positive patients have been taken from the averages in the clinical review. [¥] Simple weighed average across included RCTs [Δ] Assumed based on

Input	Data	Source
		known rates of resistance and previous ADV exposure
Perspective	NHS and PSSRU	NICE reference case[64]
Time horizon	Lifetime	NICE reference case[64]
Discount rate	Costs: 3.5% QALYs: 3.5%	NICE reference case[64]

(a) Example note – use cross referencing

Table 6: Overview of parameters and parameter distributions used in the model

Parameter description	Point estimate	Probability distribution	Distribution parameters
Baseline Risk			
Compensated cirrhosis to HCC	2.3%	Beta	α = 7.339986 β = 307.1532
Compensated cirrhosis to decompensated cirrhosis (no treatment)	5.0%	Beta	α = 6.889372 β = 130.8981
Decompensated cirrhosis to compensated cirrhosis (no treatment)	0.0%	Fixed	Not relevant
Decompensated cirrhosis to HCC	2.9%	Beta	α = 4.354499 β = 147.4874
Decompensated cirrhosis to LT	1.6%	Beta	α = 0.064327 β = 3.956082
HCC to liver transplant	1.6%	Beta	α = 4.124434 β = 253.6527
Relative treatment effects			
Relative risk of progressing from decompensated cirrhosis to HCC (48 weeks)			
Adefovir vs. Entecavir	3.20	Lognormal	LM = 0.966860 LSD = 0.626563
Entecavir vs. Tenofovir + emtricitabine	3.73	Lognormal	LM = 0.242821 LSD = 1.465324
Tenofovir + Emtricitabine vs. Tenofovir	0.63	Lognormal	LM = -0.818807 LSD = 0.835229
Relative risk of progressing from decompensated cirrhosis to LT (48 weeks)			
Adefovir vs. Entecavir	0.58	Lognormal	LM = -0.597668 LSD = 0.325394
Entecavir vs. Tenofovir + emtricitabine	0.40	Lognormal	LM = -1.830292 LSD = 1.352036
Tenofovir + Emtricitabine vs. Tenofovir	3.70	Lognormal	LM = 0.679801 LSD = 1.122081
Relative risk of progressing from decompensated cirrhosis to mortality (48 weeks)			
Adefovir vs. Entecavir	0.69	Lognormal	LM = -0.394949 LSD = 0.218568
Entecavir vs. Tenofovir + Emtricitabine	0.40	Lognormal	LM = -1.378493 LSD = 0.961459
Tenofovir + Emtricitabine vs. Tenofovir	1.25	Lognormal	LM = -0.246983 LSD = 0.969666
Annual rates of resistance – HBeAg positive treatment naïve			

Parameter description	Point estimate	Probability distribution	Distribution parameters
Adefovir			
1st year	0.0%	Beta	α = 0 β = 106
2nd year	3.8%	Beta	α = 4.028 β = 101.972
3rd year	5.7%	Beta	α = 6.042 β = 99.958
4th year	16.2%	Beta	α = 17.172 β = 88.828
5th year	16.2%	Beta	α = 17.172 β = 88.828
Entecavir			
1st year	0.2%	Beta	α = 1.326 β = 661.674
2nd year	0.3%	Beta	α = 0.834 β = 277.166
3rd year	0.7%	Beta	α = 1.043 β = 147.95
4th year	0.0%	Beta	α = 0 β = 108
5th year	0.0%	Beta	α = 0 β = 108
Tenofovir			
1st year	0.0%	Beta	α = 0 β = 176
2nd year	0.0%	Beta	α = 0 β = 176
3rd year	0.0%	Beta	α = 0 β = 176
4th year	0.0%	Beta	α = 0 β = 176
5th year	0.0%	Beta	α = 0 β = 176
Annual rates of resistance – HBeAg negative treatment naïve			
Adefovir			
1st year	0.0%	Beta	α = 0 β = 70
2nd year	2.5%	Beta	α = 1.75 β = 68.25
3rd year	3.4%	Beta	α = 2.38 β = 67.62
4th year	12.1%	Beta	α = 8.47 β = 61.53
5th year	12.1%	Beta	α = 8.47 β = 61.53
Entecavir			

Parameter description	Point estimate	Probability distribution	Distribution parameters
1st year	0.0%	Beta	α = 0 β = 222
2nd year	0.0%	Beta	α = 0 β =222
3rd year	1.2%	Beta	α = 2.664 β = 219.336
4th year	0.0%	Beta	α = 0 β =108
5th year	0.0%	Beta	α = 0 β =108
Tenofovir			
1st year	0.0%	Beta	α = 0 β = 250
2nd year	0.0%	Beta	α = 0 β = 250
3rd year	0.0%	Beta	α = 0 β = 250
4th year	0.0%	Beta	α = 0 β = 250
5th year	0.0%	Beta	α = 0 β = 250
Cost (£)			
Annual antiviral cost			
No treatment	£0	Fixed	Not relevant
Adefovir	£3, 610	Fixed	Not relevant
Entecavir	£4, 420	Fixed	Not relevant
Tenofovir	£2, 925	Fixed	Not relevant
Tenofovir + Emtricitabine	£5, 092	Fixed	Not relevant
Cost of progressive liver disease			
Compensated cirrhosis	£2,235	Gamma	α = 61.06931 β = 36.59776
Decompensated cirrhosis	£8,930	Gamma	α = 61.25360 β = 145.7873
Hepatocellular carcinoma	£9,427	Gamma	α = 61.30474 β = 153.7728
Liver transplantation	£47,737	Gamma	α = 61.28235 β = 778.9682
First year post liver transplant	£16,357	Gamma	α = 61.30987 β = 266.7923
Post liver transplant	£10,210	Gamma	α = 61.21114 β = 166.7997

H.2.3.2 Initial cohort settings

As in the studies included in the clinical review, the baseline cohort population included both HBeAg positive (47%) and HBeAg negative patients (53%). Because the studies included in the clinical review did not report data separately for each patient population, it was not possible to assess cost-effectiveness based on HBeAg status. As described by Liaw 2011 and Liaw 2011A, the population had an average age of 52 years and was 78% male.

Table 7: Total average baseline patient characteristics of included studies

Study	N	Age	Male	HBeAg positive	Baseline HBV DNA (log_{10} copies/mL)	MELD score	Prior LAM	LAM resist.	Prior ADV	ADV resist.	Dose (per day)				
											LAM	ADV	ETV	TDF	TDF+FTC
Liaw 2011[51]	191	52	74%	54%	7.83	16.2	38%	35%	NR	NR		10mg	1mg		
Liaw 2011A[52]	112	52*	84%	35%	5.98	11.7	39%	NR	21%	NR			0.5mg or 1mg	300mg	300mg + 200mg
Weighted average	**303**	**52**	**78%**	**47%**	**7.15**	**14.5**	**38%**	**35%**	**21%**	**NR**					

**Median ages of 52, 54, and 50 were reported per treatment group. An average age of 52 was assumed*

Table 8: Baseline patient characteristics by trial arm

	Liaw 2011[51]		Liaw 2011A[52]		
	ETV (1.0 mg)	ADV (10 mg)	TDV (300 mg)	FTC/TDV (300 + 200 mg)	ETV (0.5 or 1.0 mg
N	100	91	45	45	22
Age	51	53	52	50	54
Male	78%	70%	82%	89%	77%
HBeAg positive	54%	55%	31%	40%	32%
Baseline HBV DNA (log10 copies/mL)	7.53	8.16	5.70	6.28	5.93
ALT	99 (mean U/L)	100 (mean U/L)	48 (median I/U)	54 (median I/U)	52 (median I/U)
MELD score	17.1	15.3	11.0	13.0	10.5
Prior LAM exposure	39%	37%	42%	38%	36%
LAM resistance	36%	33%	NR	NR	NR
Prior ADV exposure	NR	NR	20%	22%	23%
ADV resistance	NR	NR	NR	NR	NR

H.2.3.3 Baseline event rates

The baseline transition probabilities were extracted from the hepatitis B literature and checked for quality by the GDG and the technical team using quality checklists. The transition probabilities inform the transitions between health states in the Markov model. The treatments effects are multiplied by these baseline transition probabilities to give the transition probabilities associated with a treatment. Therefore it is essential that these transitions are representative of the specificities of the disease under study. The baseline event rates (or transition probabilities) can be found in Table 9. The structure of the model is given in Figure 2 where the numbers beside each of the arrows represents a particular transition given in the table.

Figure 2: Transition probability diagram

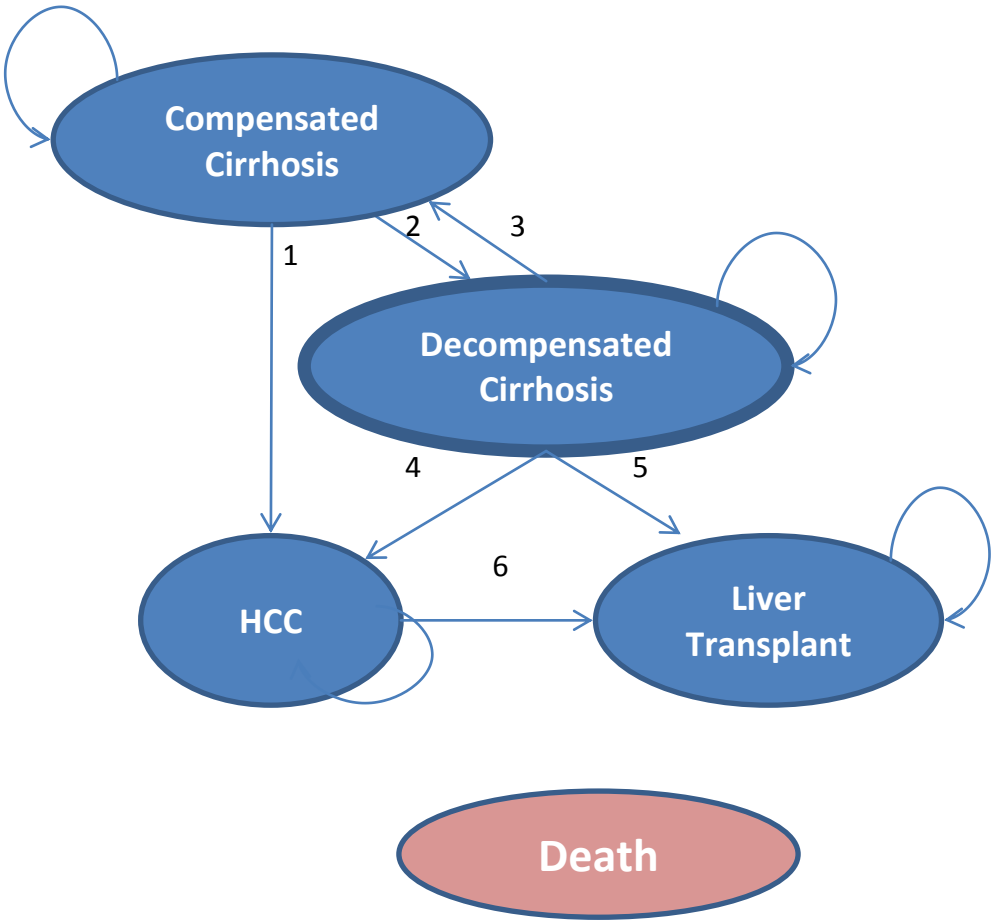

Table 9: Baseline (natural history) transition probabilities for people with compensated CHB

Transition (Figure 2)	Parameter description	Mean probability	95% Confidence Interval	Source
1	Compensated cirrhosis to Hepatocellular Carcinoma (HCC)	2.3%	1.0% to 4.3%	Among people with CHB and cirrhosis, the annual probability of developing HCC ranges from 0.2% to 7.8% [86]. The REVEAL study[10] found that compared to people with HBV DNA of less than 300c/ml, the hazard ratio (HR) of developing HCC was 21.8 (95% CI 14.9 to 32.0) for people with liver cirrhosis. This transition probability was calculated by multiplying this HR by the annual rate of HCC calculated for transition 15 in a probabilistic simulation[¥]. The resulting value is similar to the value used by Dakin 2010[16] that and Wong 1995[86] (mean 2.4%, 95% CI 0.0% to 8.0%. According to the systematic review and meta-analysis by Singal 2011[77], the probability of developing HCC is the same for people with HBV DNA positive CC as for those with HBV DNA negative CC. This is the same assumption made by Dakin 2010.
2	Compensated cirrhosis to decompensated cirrhosis (no treatment)	5.0%	2.3% to 9.5%	Wong 1995[86] report that the annual probability that people with cirrhosis will experience hepatic decompensation ranges from 3.8% to 9.5%. The value used to inform this transition probability was obtained from Dakin 2010[16] based on studies by Crowley 2002[13], Crowley 2000[14], Lavanchy 2004[48], Fattovitch 1995[26], Liaw 1987[54]. This value is similar to that used by Wong 1995[86] of 5.9% and attributed to a study by Fattovich 1993[25]. According to this study, neither the presence of HBV DNA nor HBeAg predicted the development of decompensation. Therefore, the same probability was applied to people with HBV DNA negative CC and HBeAg negative CHB.
3	Decompensated cirrhosis to compensated cirrhosis (no treatment)	0.0%	0.0% to 0.0%	This value was based on the assumption by Dakin 2010[16] that this transition was not permitted as none of the reviewed literature reported patients who had recovered from DC without treatment.
4	Decompensated cirrhosis to HCC	2.9%	1.0% to 6.2%	A recent systematic review of the incidence of HCC in CHB found that in 12 studies providing data on the incidence of

Transition (Figure 2)	Parameter description	Mean probability	95% Confidence Interval	Source
				HCC in relation to the severity of cirrhosis, HCC was diagnosed in 78 of 779 people with compensated and 18 of 148 people with decompensated cirrhosis. The resulting odds ratio (OR 1.24, 95% CI 0.72 to 2.15) was multiplied by the probability of transition 1 using probabilistic simulation[¥]. Note that this calculation is in contrast to the findings by Singal 2011[77], and the assumption by Dakin 2010[16] and Wong 1995[86]; that people with decompensated cirrhosis have the same probability of developing HCC as people with compensated cirrhosis.
5	Decompensated cirrhosis to liver transplant	1.6%	0.0% to 20.0%	According to Dakin 2010[16], data from the UK National Transplant Database (UK Transplant 2002)[65] suggests that approximately 25 liver transplants are conducted in the UK every year for CHB. If it is assumed that liver transplantation is only conducted on patients with CHB if they have HCC or DC, then 1.4% of people with CHB would be indicated for transplantation, based on the London clinical audit. If the total prevalence of CHB in the UK is 0.3% (DoH 2010)[9] and 65% of people with CHB are diagnosed (32,33), there are around 115, 500 people in the UK with diagnosed CHB, of whom around 1600 (1.4%) would have HCC or DC and be indicated for transplant. This suggests that the chance of any one patient with DC of HCC undergoing liver transplant in any given year is 1.55%. Minimum assumes no liver transplants are conducted for decompensated cirrhosis. Maximum is expert opinion).
6	HCC to liver transplant	1.6%	0.0% to 3.1%	This figure was based on the assumption by Dakin 2010[16] that the risk of liver transplant from HCC is equal to that from DC; the minimum value assumes that no liver transplants are conducted for HCC and the maximum was arbitrarily chosen to be twice the mean value.

Table 10: On treatment probability (replaces natural history probabilities for all patients on antiviral treatment)

Transition (Figure 2)	Parameter description	Mean probability	95% Confidence Interval	Source
2	Compensated cirrhosis to decompensated cirrhosis	1.4%	0.8% to 2.0%	This value was informed by the analysis by Dakin 2010[16], who calculated this probability based on a pooled analysis of 3 studies of cirrhotic patients receiving lamivudine and/or adefovir (Oo 2012 [66], Lampertico 2006[45], Liaw 2004[53].
3	Decompensated cirrhosis to compensated cirrhosis (first year only; subsequent years = 0%)	13.6%	10.5% to 16.6%	This value was informed by the analysis by Dakin 2010[16], who reported that the study by Schiff 2003[75] found that 21 of 128 patients with decompensated cirrhosis receiving LAM + ADF no longer needed liver transplantation and contradictory findings by Ooga 2004 that no patients improved from Child Pugh B/C to A. The probability reported by Dakin 2010[16] was based on a weighted average rate from these two studies.

H.2.3.4 Mortality

Data on total mortality were applied to people in decompensated cirrhosis, compensated cirrhosis, HCC, liver transplant and post liver transplant health states (Table 11). The effect of treatment on mortality in patients with decompensated cirrhosis was applied based on data included in the systematic clinical review (see section H.2.3.5). Nucleos(t)ides were conservatively assumed to have no effect on mortality in patients with compensated cirrhosis, HCC, or liver transplant.

Table 11: Total annual mortality associated with each health state

Transition	Health state	Mean value	Range	Source
A	CC	3.7%	3.0% to 4.4%	The five year mortality rate in people with CHB and compensated cirrhosis reported to range from 14% to 20%[24]. This is equivalent to an annual probability of 3.0% to 4.4%. The mean value was calculated based on this reported range.
B	DC	15.6%	11.9% to 20.3%	The five year mortality rate in people with decompensated cirrhosis was reported to be 45 out of 53 people. This is equivalent to an annual probability of 15.6% and a 95% CI of 11.9% to 20.3%[24].
C	HCC	56%	43% to 99%	The mean value was informed by a report from the Surveillance, Epidemiology and End Results (SEER) Program. The 5 year relative survival for persons with liver cancer is 5% to 6%, yielding a disease-specific excess mortality of 56% per year on top of the baseline mortality. Dakin 2010[16] used these sources to find the range: (Wong 1995[86], Crowley 2002[13],Crowley 2000[14], Lavanchy 2004[48].
D	LT (first year) (subsequent years)	21.0% 5.7%	6.0% to 42.0% 2.0% to 11.0%	Mortality during the first and subsequent years following liver transplantation was based on a study by Veenstra 2007[83]. These values were similar to those used in models by Kanwal 2006[39] (first year mean 18.8% and subsequent years 5.4%) and Wong 2011[88] (first year NR and subsequent years 6.7%).

H.2.3.5 Relative treatment effects

As described in section H.2.3.3, baseline transition rates for the natural history of decompensated cirrhosis due to CHB were obtained from the literature. The impact of NA treatment on disease progression was modelled by applying the relative treatment effects identified by the systematic clinical review to the relevant transition rates. The relative risk of progressing to mortality, HCC, and liver transplant for each NA as described by Liaw 2011[51] and Liaw 2011A[52] is reported in Table 12, Table 13, and Table 14, respectively.

Table 12: Mortality (48 weeks)

	LAM	ADV	TDF	ETV	TVA
LAM					
ADV					
ETV		0.69 (0.45,	2.0 (0.31,		

	LAM	ADV	TDF	ETV	TVA
		1.06)	12.92)		
TDF					
TVA			0.8 (0.12, 5.37)	0.40 (0.06, 2.60)	

Table 13: Hepatocellular Carcinoma (48 weeks)

	LAM	ADV	TDF	ETV	TVA
LAM					
ADV					
ETV		0.58 (0.31, 1.11)	0.67 (0.08, 5.91)		
TDF					
TVA			0.27 (0.03, 2.44)	0.40 (0.03, 6.01)	

Table 14: Liver transplant (48 weeks)

	LAM	ADV	TDF	ETV	TVA
LAM					
ADV					
ETV		3.2 (0.94, 10.96)	0.39 (0.02, 7.64)		
TDF					
TVA			1.60 (0.31, 8.19)	3.73 (0.21, 65.59)	

Estimates of relative effect were incorporated into the model using a series of pair-wise comparisons; no network meta-analysis was performed. By multiplying relative risks in sequence, the effect size of each comparator can be established relative to a baseline. This method is sometimes known as an 'indirect comparison', although in fact involves applying a set of direct comparisons in sequence. Within our series, in the absence of studies which included a placebo comparator, adefovir was chosen to represent the 'baseline' treatment strategy.

Figure 3: Series of pair-wise comparisons identified within the clinical review

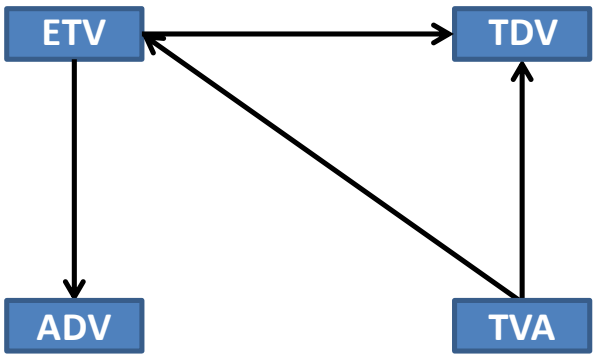

Figure 3 illustrates the series of pair wise comparisons identified in the clinical review and Figure 4 shows an example of this network with the relative risks and confidence intervals for mortality at 48 weeks for people with decompensated cirrhosis. The direction of the arrow

indicates the direction of effect (i.e. TVA > TDV = 0.80; therefore tenofovir + emtricitabine results in a 20% reduction in mortality over 48 weeks).

Figure 4: Network of Relative risks for direct treatment comparisons for mortality outcome

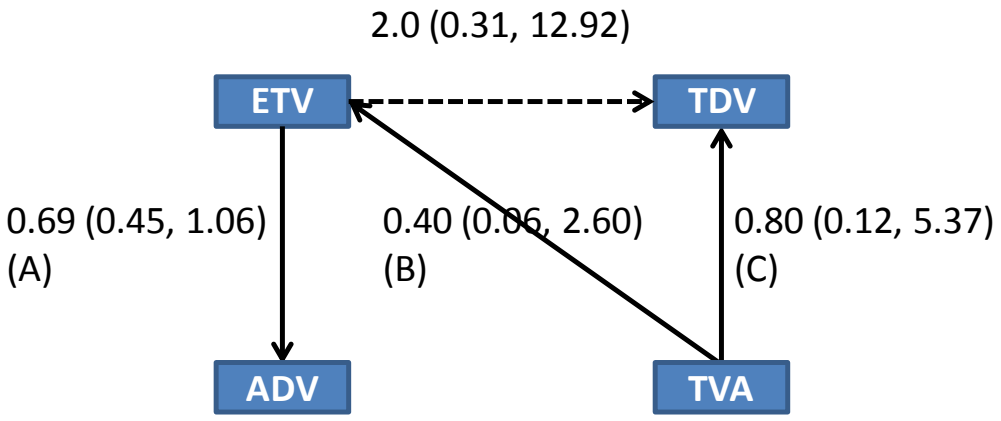

Note: The Letters in brackets are used to illustrate the calculations below.

As illustrated by Figure 5, in order to establish the relative effectiveness of NAs that are not directly compared, a simple multiplication of other RRs can be done. The red arrows in Figure 5 denote instances of where these 'indirect' comparisons have been made in order to connect the comparators relative to the chosen baseline, adefovir.
For example:

ETV versus ADV (A) x ETV versus TVA (B)
= TVA versus ADV

In order to establish the relative effectiveness of TDV versus ADV it was necessary to multiply three RRs, taking the inversion (1/RRs) of TVA versus TDV in order to retain the correct order of effect:

ETV versus ADV (A) * ETV versus TVA (B) * (1/TVA versus TDV (C))
= TDV versus ADV

Figure 5: Calculations of relative risks for indirect comparisons for mortality outcome

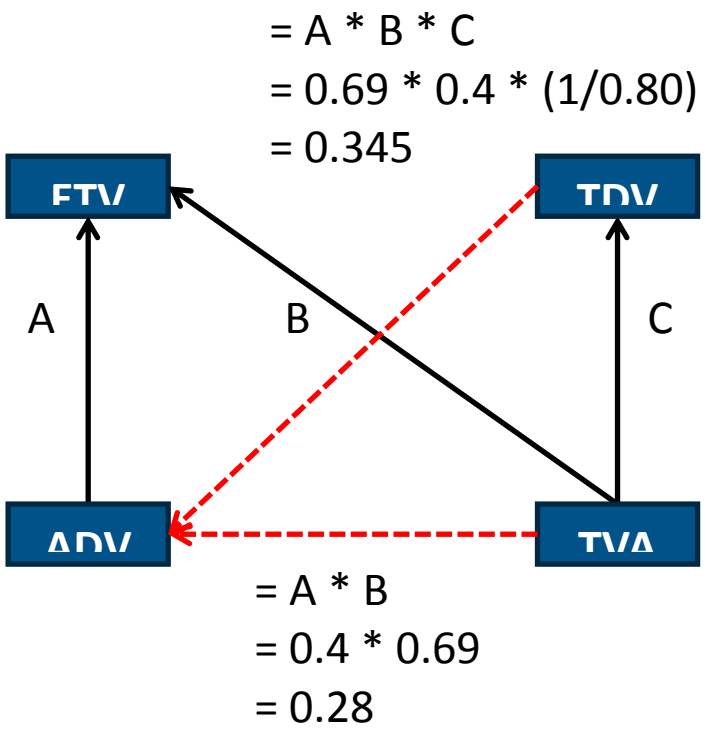

Multiplying A x B x (1/C) produces a risk ratio of 0.345 (Figure 5). Note that there is another path that could be used to calculate the same outcome. As shown in Figure 4 the comparison of ETV with TDV could also be used to produce the RR of TDV compared with ADV. This was not used to ensure consistency. However, if the calculation is completed, there is very little inconsistency as the calculation: 0.69*(1/2.0) = 0.345 as well.
Figure 6 shows the relative risk of mortality associated with each intervention compared to Adefovir. The calculations were then carried out for all three outcomes of interest; the relative risk for each outcome relative to Adefovir is presented in Table 15.

Figure 6: Relative risks of all comparators used in baseline for mortality outcome

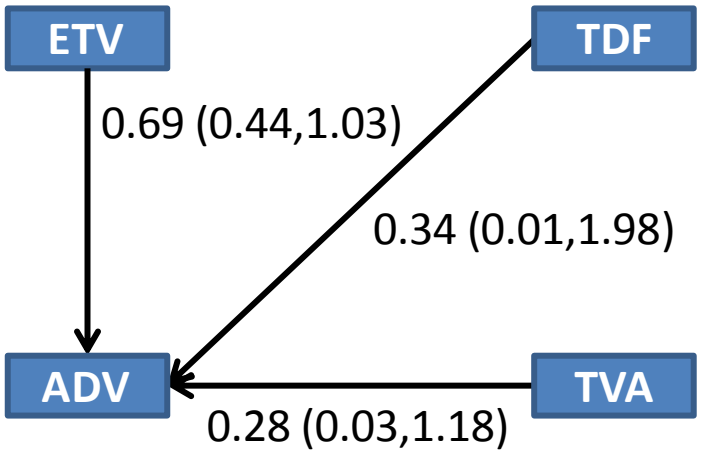

Table 15: Relative risks compared to baseline (adefovir) for all outcomes

Drug	Comparison	RR
Mortality		

Drug	Comparison	RR
Adefovir	Baseline transition probability	1.00
Entecavir	Adefovir vs. Entecavir	0.69 (0.45, 1.06)
Tenofovir + emtricitabine	Adefovir vs. Entecavir x Entecavir vs. Tenofovir + emtricitabine	0.28 (0.02, 1.19)
Tenofovir	Adefovir vs. Entecavir x Entecavir vs. Tenofovir + emtricitabine x Tenofovir + emtricitabine vs Tenofovir	0.34 (0.01, 1.93)
Hepatocellular carcinoma		
Adefovir	Baseline transition probability	1.00
Entecavir	Adefovir vs. Entecavir	0.58 (0.29, 1.05)
Tenofovir + emtricitabine	Adefovir vs. Entecavir x Entecavir vs. Tenofovir + emtricitabine	0.23 (0.01, 0.33)
Tenofovir	Adefovir vs. Entecavir x Entecavir vs. Tenofovir + emtricitabine x Tenofovir + emtricitabine vs Tenofovir	0.84 (0.01, 5.79)
Liver transplant		
Adefovir	Baseline transition probability	1.00
Entecavir	Adefovir vs. Entecavir	3.21 (0.77, 9.08)
Tenofovir + emtricitabine	Adefovir vs. Entecavir x Entecavir vs. Tenofovir + emtricitabine	11.75 (0.15, 74.06)
Tenofovir	Adefovir vs. Entecavir x Entecavir vs. Tenofovir + emtricitabine x Tenofovir + emtricitabine vs Tenofovir	7.30 (0.04, 50.03)

H.2.3.6 Antiviral resistance

The consideration of the development of resistance is essential in any analysis of antiviral medications. In this analysis any first line medication is followed by a second line treatment if resistance is developed. The resistance rates were defined by studies identified in a search of the literature. The rates that were used in the model can be found in Table 15. The resistance rates are defined over a 5 year period and are different for different populations, both for HBeAg positive CHB and negative CHB.

Resistance rates were not identified for people with adefovir and entecavir resistance, or for those on Tenofovir + emtricitabine. In the absence of other data, resistance rates for people who are NA naïve were applied to all patients and rates for tenofovir were assumed to also apply to people treated with Tenofovir + emtricitabine. Rates for HBeAg positive and negative populations were applied according to the total average proportion of HBeAg positive patients in the baseline population (47%).

Table 16: HBeAg positive CHB - Cumulative resistance rates associated with antiviral therapy

Antiviral	Year 1	Year 2	Year 3	Year 4	Year 5	Source
Treatment naïve						
Adefovir	0.0%	3.8%	9.5%	25.7%	NR	A RCT by An 2012[2] treated a group of 106 HBeAg positive patients with adefovir for 192 weeks and reported cumulative resistance rates for a follow-up of up of 4 years. Five year cumulative resistance rates were not identified in the literature for HBeAg positive patients.
Entecavir	0.2%	0.5%	1.2%	1.2%	1.2%	Tenney 2009[80] reported the results of six phase II and III studies of entecavir therapy in both treatment naïve and lamivudine resistant patients treated for up to 5 years. Patients included in these studies were predominantly HBeAg positive. The cumulative probability of developing genotypic resistance was provided over five years, with sample sizes of 663, 278, 149, and 108, respectively.
Tenofovir	0.0%	NR	0.0%	NR	0.0%	Marcellin 2008[60] reported the results of two phase III trials of tenofovir in HBeAg positive and negative treatment naive patients. At one year, there was no decreased sensitivity to tenofovir in either group (out of 176 HBeAg positive patients). The three year results of two phase III open label trials of tenofovir in both HBeAg positive and negative patients are reported in Heathcote 2011[34]. Resistance surveillance results are not separated by HBeAg status, but report that of 29 patients included in resistance testing, three had a conserved site change but none had decreased phenotypic sensitivity to tenofovir (Heathcote 2011; Snow-Lampart 2011[78]), or at 4 years[79]). After year 5 of a phase III trial, Marcellin 2011[61] reported that none of the patients had detectable resistance to tenofovir.

NR = not reported/identified in the published literature
**Entecavir was not included as a suitable second line treatment option for lamivudine resistant patients on the basis of cross-resistance.*

Table 17: HBeAg negative CHB - Cumulative resistance rates associated with antiviral therapy

Drug	Year 1	Year 2	Year 3	Year 4	Year 5	Source
Treatment naïve - HBeAg negative CHB						
Adefovir	0.0%	2.5%	5.9%	18%	30%	Hadziyannis et al conducted a RCT of adefovir compared to placebo. Cumulative resistance among the 70 patients randomised to the adefovir arm was reported in Hadziannis 2005[32]. By five years, approximately 30% of treatment naïve patients develop adefovir resistance.[33]. The rates reported by this trial are very similar those reported by Delaney 2007 (0%, 3%, 11%, 18% and 29%, respectively) among HBeAg negative treatment naïve patients.[18]
Entecavir	0.0%	0.0%	1.2%	NR	NR	According to a study by Lai 2006[43], no evidence of resistance to entecavir has been observed in HBeAg negative treatment naïve patients at 1 year. Similarly, a cohort study of treatment naïve CHB patients (60% HBeAg negative) found that the cumulative rates of development of entecavir resistance were 0%, 0% and 1.2% (1 out of 222 patients) for the first three years

						(Yuen 2011). Resistance at four and five years was not identified in the literature.
Tenofovir	0.0%	NR	0.0%	NR	NR	Marcellin 2008[60] reported the results of two phase 3 trials of tenofovir in HBeAg positive and negative treatment naive patients. At one year, there was no decreased sensitivity to tenofovir in either group (out of 250 HBeAg negative patients). The same result was reported by Berg 2010.[3]The three year results of two phase III open label trials of tenofovir in both HBeAg positive and negative patients are reported in Heathcote 2011[34]. Although resistance surveillance results are not separated by HBeAg status, but report that of 29 patients included in resistance testing, three had a conserved site change but none had decreased phenotypic sensitivity to tenofovir[34]. Resistance at two, four and five years was not identified in the literature.

H.2.3.7 Utilities

Quality of life data was obtained from a Canadian study of over 400 patients in different stages of CHB. Quality of life was elicited using the EQ 5D and closely matched the health states used within the model. Values for each health state are reported in Table 18.
Woo and colleagues found quality of life among patients with HBV did not appear to be associated with the infection, but with the presence of cirrhosis and HCC. Antiviral treatment was also found not to affect quality of life; there was no difference people receiving and not receiving antiviral therapy.

Table 18: EQ5D Utilities values

Health state	Mean value	Low CI	Upper CI	Source
Compensated cirrhosis	0.88	0.85	0.92	Woo 2012[89]
Decompensated cirrhosis	0.73	0.39	1.00	Woo 2012[89]
Hepatocellular carcinoma	0.81	0.67	0.94	Woo 2012[89]
Post-liver transplant	0.84	0.77	0.91	Woo 2012[89]

H.2.3.8 Resource use and cost

Anti-viral drug therapy

Drug costs were calculated based on prices quoted in the British National Formulary 63 (March 2012). Optimal doses were obtained from the BNF, confirmed by the GDG, and in accordance with doses used in the trials included in the clinical review (Table 5).

Table 19: Unit costs of antiviral drug therapy

Non-proprietary (proprietary)	Dose	Net price per pack	Cost per year*
Adefovir (Hepsera)	10 mg (tablets)	£296.73 (30 tablets/pack)	£3,610
Entecavir (Baraclude)	0.5 mg (tablets)	£363.26 (30 tablets/ pack)	£4,420
Tenofovir (Viread)	245 mg (tablets)	£240.46 (30-tab pack)	£2,925
Tenofovir + Emtricitabine (Tenofovir + emtricitabine)	245 mg tenofovir + 200 mg tenofovir + emtricitabine (combined tablets)	£418.50 (30-tab pack)	£5,092

*Source: BNF March 2012[38] *Calculated as a 48-week course of treatment*

Monitoring

The cost of managing patients in each health state was based on the recommended frequency and modes of monitoring for each health group. The unit costs associated with the each laboratory test, diagnostic test and outpatient visit were based on 2011 NHS Reference Costs,[19] and 2011 PSSRU data,[15] and expert opinion from the GDG.

Monitoring people with compensated cirrhosis

Entecavir and Lamivudine
Recommendation 1.6.12: Monitor blood count, liver function, renal function, blood clotting, HBV DNA levels and quantitative HBeAg levels at baseline, 4, and 12 weeks of treatment and every 6 months thereafter in patients treated with entecavir and lamivudine to assess treatment-related toxicity
Recommendation 1.6.13: Monitor HBV DNA levels, quantitative hepatitis B surface antigen (qHBsAg), quantitative HBeAg levels and ALT levels at 24 and 48 weeks in patients treated with entecavir and lamivudine to determine treatment response

Table 20: Cost of monitoring people with compensated cirrhosis treated with LAM or ADV.

Monitoring to assess toxicity		
Item	**Cost**	**Cost source**
Time with nurse – Band 7 for 20 minutes	£47.33	PSSRU*
Full blood count	£2.49	Shepherd 2006[76]
Liver function test	£1.03	Expert opinion
Renal function test	£0.80	Expert opinion
Blood clotting	£3.80	Shepherd 2006[76]
HBV DNA	£40.00	Expert opinion
HBsAg qualitative (except at 4 weeks)	£5.00	Expert opinion
Monitoring to assess treatment response		
Item	**Cost**	**Cost source**
Time with specialist physician – Hepatologist for 20 minutes	£176	NHS Reference Costs,[19]**
HBeAg	£8.00	Expert opinion
Hepatitis B DNA	£40.00	Expert opinion
ALT	£0.59	Expert opinion
HBsAg quantitative	£10.00	Expert opinion
Associated total annual cost* **	**£680**	

*Based on a unit cost of £142 per hour of patient contact for a Band 7 nurse including the cost of qualifications.
**Based on the national average cost of a follow-up appointment with a consultant hepatologist.
***Calculated by averaging the cost of toxicity monitoring (x3 in first year and x2 in subsequent years) over ten years.

Tenofovir & Tenofovir + Emtricitabine
Recommendation 1.6.15: Monitor full blood count, liver function (including bilirubin, albumin and ALT), renal function (including urea and electrolyte levels and urine protein/creatinine ratio), and phosphate levels before starting tenofovir disoproxil, 4 and 12 weeks after starting treatment and then every 6 months to detect adverse effects.
Recommendation 1.6.16: Monitor HBV DNA levels, quantitative HBsAg levels and HBesAg status before starting tenofovir disoproxil, 12,24 and 48 weeks after starting treatment and then every six months to determine treatment response and medicines adherence.

Table 21: Cost of monitoring people with compensated cirrhosis treated with ETV or TDV

Monitoring to assess toxicity		
Item	**Cost**	**Cost source**
Time with nurse – Band 7 for 20 minutes	£47.33	PSSRU*

Monitoring to assess toxicity		
Item	**Cost**	**Cost source**
Full blood count	£2.49	Shepherd 2006[76]
Liver function test	£1.03	Expert opinion
Renal function test	£0.80	Expert opinion
Blood clotting	£3.80	Shepherd 2006[76]
Phosphate	£0.60	Expert opinion
Urine test for protein/creatine ratio	£0.58	Expert opinion
HBV DNA	£40.00	Expert opinion
HBsAg qualitative (except at 4 weeks)	£5.00	Expert opinion
Monitoring to assess treatment response		
Item	**Cost**	**Cost source**
Time with specialist physician – Hepatologist for 20 minutes	£176	NHS Reference Costs,[19]**
HBeAg	£8.00	Expert opinion
HBV DNA	£40.00	Expert opinion
ALT	£0.59	Expert opinion
HBsAg quantitative	£5.00	Expert opinion
Associated total annual cost* **	**£673**	

*Based on a unit cost of £142 per hour of patient contact for a Band 7 nurse including the cost of qualifications.
**Based on the national average cost of a follow-up appointment with a consultant hepatologist.
***Calculated by averaging the cost of toxicity monitoring (x3 in first year and x2 in subsequent years) over ten years.

Monitoring people with decompensated cirrhosis

Lamivudine and Entecavir

Recommendation 1.6.17: Monitor full blood count, liver function(including bilirubin, albumin and ALT), renal function (including urea and electrolyte levels and urine protein/creatinine ratio) and phosphate, blood clotting, HBV DNA level and HBeAg staus before starting Entecavir and Lamivudine and weekly after starting treatment to assess treatment response and adverse effects. When the person is no longer decompensated follow the recommendations in yochildren young people and adults with compensated liver disease taking tenofovir.

Table 22: Cost of monitoring people with decompensated cirrhosis treated with LAM or ADV

Item	Cost	Cost source
Time with nurse – Band 7 for 20 minutes	£47.33	PSSRU*
Full blood count	£2.49	Shepherd 2006[76]
Liver function test	£1.03	Expert opinion
Renal function test	£0.80	Expert opinion
Blood clotting	£3.80	Shepherd 2006[76]
HBV DNA	£40.00	Expert opinion
HBsAg qualitative (except at 4 weeks)	£5.00	Expert opinion
Total weekly cost	£100.45	
Total annual cost (52 weeks)	**£5, 223**	

*Based on a unit cost of £142 per hour of patient contact for a Band 7 nurse including the cost of

Item	Cost	Cost source
qualifications.		

Table 23: Cost of monitoring people with decompensated cirrhosis treated with ETV or TDV

Item	Cost	Cost source
Time with nurse – Band 7 for 20 minutes	£47.33	PSSRU*
Full blood count	£2.49	Shepherd 2006
Liver function test	£1.03	Expert opinion
Renal function test	£0.80	Expert opinion
Blood clotting	£3.80	Shepherd 2006
Phosphate	£0.60	Expert opinion
Urine test for protein/creatine ratio	£0.58	Expert opinion
HBV DNA	£40.00	Expert opinion
HBsAg qualitative (except at 4 weeks)	£5.00	Expert opinion
Total weekly cost	£101.63	
Total annual cost (52 weeks)	**£5, 285**	
*Based on a unit cost of £142 per hour of patient contact for a Band 7 nurse including the cost of qualifications.		

Progressive liver disease

Three potential sources for estimating the cost of progressive liver disease were identified. Brown 2004[4] identified the average cost associated with different stages of CHB-specific liver disease in France, Italy, Spain and the UK.

Wright 2006[90] measured costs associated with different stages of hepatitis C in London, Newcastle and Southampton. For the stages related to mild disease, resource use and cost data were collected as part of an RCT. An observational study was conducted to collect data on moderate, compensated and decompensated cirrhosis. Liver transplantation costs were obtained from the national Department of Health-funded liver transplantation study.

Dakin 2010[16] obtained the costs of managing different stages of progressive liver disease a large, retrospective UK microcosting study in patients with hepatitis C. The cost associated with liver transplant included time spent on the waiting list, the cost of transplant operation and cost for the first 8 months follow up. The cost of the first year post-transplant and for each subsequent year were obtained from authors of a report to the Department of Health entitled Economic evaluation of the liver transplant program in England and Wales: an assessment of the costs of liver transplantation.

The GDG discussed the cost of liver disease in the context of advances in treatment over the past ten years. It was decided to use the estimate reported in Dakin 2010 as it was the most up to date and most likely to reflect current practice. Before incorporating these costs into the model they were inflated to 2010/11 prices using the Pay and Prices inflation indices reported in the 2011 PRSSU.[15]. Table 24 contains the prices reported in the paper, and the updated 2010/11 costs included in the current model. The effect of using costs from the other sources is explored in sensitivity analysis.

Table 24: Costs of progressive liver disease reported by Dakin 2010

Health State	2006/07 £	2010/11 £
Hepatocellular carcinoma	£9,580	£10, 976
Transplantation	£60,291	£69, 076
First year post transplant	£5,000	£5, 729
Post-transplant	£6,333	£7, 256

H.2.4 Sensitivity analyses

The following sensitivity analyses were undertaken to explore the effect of different parameter inputs and assumptions on the results of the model. The results of all sensitivity analyses are presented in section H.3.2.

SA1:

The baseline probability of developing HCC from decompensated cirrhosis was informed by a systematic review of the incidence of HCC in relation to the severity of CHB. This study found that there was a greater probability of HCC in people with decompensated compared to compensated cirrhosis (OR 1.24, 95% CI 0.72 to 2.15). However Singal 2011[77], Dakin 2010[16] and Wong 1995[86] assumed that they have the same probability of developing HCC as people with compensated cirrhosis. The effect of using the same value to inform both transitions was explored included as a one-way sensitivity analysis.

SA 2:

A major consideration when discussing liver transplant is availability. Only a certain number of livers are available in the UK every year. Although the probability of entering the liver transplant state in the model is small, the model does assume unlimited availability meaning that anyone who needs a transplant will receive one. In order to consider the impact of this issue, the probability of receiving a liver transplant was set to zero. Of course this does not properly consider the increased mortality from patients who cannot receive a liver transplant but might need one so this remains a limitation to the model.

SA3 to SA5:

Currently, there is no known resistance to Tenofovir. However, given the trend observed in other NAs, this could be expected to occur in the future. We explored the impact of potential tenofovir resistance by increasing annual rates to 1%, 2%, and 3% in a series of one-way sensitivity analyses.

SA6 to SA8:

The probability of withdrawal due to side effects was considered to be 0% in the base case. This is due to the patients being so sick when in DC that they are unlikely to withdraw from treatment even if the treatment is unpleasant. In order to test the robustness of this assumption, the probability of withdrawal is increased to 3% for ADV and TDV, while ETV remained as 0%. An even more extreme sensitivity analysis was run where the withdrawal probability was increased to 6% for ADV and TDV and withdrawals for ETV were increased to 3%. Another SA was done to test the robustness of the data on no resistance and no withdrawal for TDV. The withdrawal rate and resistance rates for TDV were increased to 3% each while all other withdrawal and resistance rates were held the same.

SA9:

Various sources reported different utility values for quality of life in patients with decompensated cirrhosis. The base case source, Woo2012[89] were used as they were the most appropriate population and utility elicitation tool. However Levy2008[50] used the standard gamble technique to elicit health state preferences that produced lower utilities overall Table 25. A sensitivity analysis was therefore run to see what effect this elicitation technique would have on the overall results.

Table 25: Quality of life values from Levy 2008[50]

Health state	Mean value	Source
Compensated cirrhosis	0.69	Levy 2008
Decompensated cirrhosis	0.35	Levy 2008
Hepatocellular carcinoma	0.38	Levy 2008

Health state	Mean value	Source
Liver transplant	0.57	Levy 2008
Post-liver transplant	0.67	Levy 2008

SA10 to SA12:
The cost of treating liver disease is constantly changing, as new technologies become available and as the cost of care fluctuates between health care settings and systems. In order to test the sensitivity of the model to fluctuations in cost over both time and location, two other sources that costed liver disease were used in sensitivity analysis. The values from Brown2004[4] and Wright 2006 [90]can be found in Table 26 and Table 27 respectively.

Table 26: Annual costs of progressive liver disease in hepatitis B reported by Brown 2004

Health State	2001 €	2010/11 £
Hepatocellular carcinoma	£9, 312	£9,427
Transplantation	£47, 153	£47,737
First year post transplant	£16, 157	£16,357
Post-transplant	£10, 085	£10,210

Table 27: Annual costs of progressive liver disease in hepatitis C reported by Wright 2006

Health State	2002/03 £	2010/11 £
Hepatocellular carcinoma	£8, 127	£9, 311
Transplantation	£35, 743	£40, 951
First year post transplant	£9, 458	£10, 836
Post-transplant	£1, 385	£1, 587

The GDG suggested that some PCTs and trusts are offered discounts by the manufacturers of Tenofovir + emtricitabine. However there was no data available on what these discounts might be. Therefore a threshold analysis was run to see how cheap it would have to become before it became cost effective, if at all.
SA 13:
The NICE reference case calls for discount rates of 3.5% per year on both costs and outcomes. In order to assess the impact that this has on cost effectiveness, a sensitivity analysis was run that reduced the discount rate on outcomes to 1.5% per year.

H.2.5 Model validation

The model was developed in consultation with the GDG; model structure, inputs and results were presented to and discussed with the GDG for clinical validation and interpretation.
The model was systematically checked by the health economist undertaking the analysis; this included inputting null and extreme values and checking that results were plausible given inputs. The model was peer reviewed by a second experienced health economist from the NCGC; this included systematic checking of the model calculations, checking all inputs and checking distributions.

H.2.6 Interpreting results

H.2.6.1 Incremental cost effectiveness ratios

The results of cost-effectiveness analysis are presented as incremental cost-effectiveness ratios (ICERs). ICERs are calculated by dividing the difference in costs associated with two alternative treatments by the difference in QALYs:

Where more than two interventions are being compared, the ICER is calculated according to the following process:

- The interventions are ranked in terms of cost, from least to most expensive.
- If an intervention is more expensive and less effective than the preceding intervention, it is said to be 'dominated' and is excluded from further analysis.
- ICERs are then calculated for each drug compared with the next most expensive non-dominated option. If the ICER for a drug is higher than that of the next most effective strategy, then it is ruled out by 'extended dominance'
- ICERs are recalculated excluding any drugs subject to dominance or extended dominance.
- When there are multiple comparators, the option with the greatest average net benefit may also be used to rank comparators.

NICE's report 'Social value judgements: principles for the development of NICE guidance' sets out the principles that GDGs should consider when judging whether an intervention offers good value for money. In general, an intervention is considered to be cost-effective if either of the following criteria applies:

- The intervention dominates other relevant strategies (that is, is both less costly in terms of resource use and more clinically effective compared with all the other relevant alternative strategies), or
- The intervention costs less than £20,000 per quality-adjusted life-year (QALY) gained compared with the next best strategy.

H.2.6.2 Net benefit framework

The net benefit (NB) framework allows us to rearrange the decision rule using the threshold value.

The decision rule then becomes a simple question of maximising net benefit; the strategy with the greatest average NB is also the most cost effective option. This framework also eliminates the need to consider dominance and calculating ICERs with respect to the most appropriate comparator. As such, it allows us to rank order interventions according to cost-effectiveness.

Using the net benefit framework in probabilistic modelling, we are able to calculate the probability that a strategy will be cost effective (have the greatest NB) over a number of simulations. However, because this method does not take into account the magnitude of the simulations, the optimal treatment is not always the one with the greatest proportion of simulations in its favour. In order to calculate the optimal treatment when there are a large number of strategies, it is most useful to consider the cost-effectiveness frontier.

H.3 Results

H.3.1 Base case

The results of the base case analysis show that tenofovir + emtricitabine followed by entecavir is the most effective strategy for the treatment of people with decompensated cirrhosis due to CHB. This strategy results in an additional 0.19 QALYs and is £23, 050 more costly than the next most effective treatment, at a cost of £121, 147 per QALY gained. Because this strategy far exceeds the £20, 000 to £30, 000 threshold, it is not considered to represent a cost effective use of NHS resources.

After excluding strategies that are dominated or extendedly dominated (Figure 5), the base case analysis shows that tenofovir followed by entecavir is the next most effective strategy with an ICER of £13, 858 per QALY gained. Taking into account uncertainty surrounding

each model input, there is an 87.1% probability that tenofovir followed by entecavir is the most cost-effective treatment strategy for people with decompensated cirrhosis due to CHB. The cost and QALYs associated with each strategy are reported in Table 28.

Figure 7: Strategies for the treatment of decompensated cirrhosis due to chronic CHB

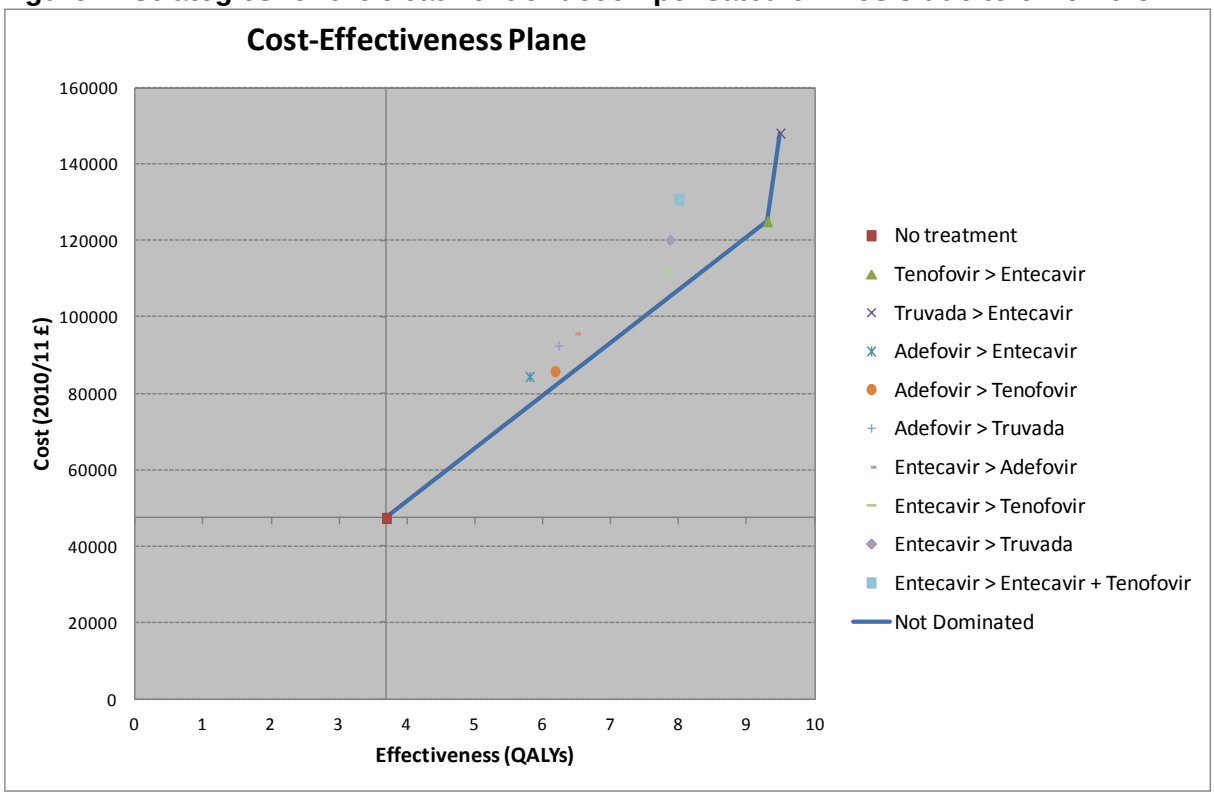

Table 28: Results of the base case analysis (probabilistic)

Strategy	Total Cost	Inc. Cost	Total Eff	Inc. Eff	Cost per QALY gained (ICER)	At £20,000 threshold		
						NMB	Probability Cost effective	Rank by NMB
No treatment	£47, 382	Baseline	3.689	Baseline	Baseline	£26, 389	1.17%	10
Adefovir > Entecavir	£84, 415		5.796		Extended Dominated	£31, 509	0.29%	8
Adefovir > Tenofovir	£85, 836		6.170		Extended Dominated	£37, 563	2.41%	4
Entecavir > Adefovir	£92, 552		6.223		Extended Dominated	£33, 670	2.03%	6
Adefovir > Tenofovir + emtricitabine	£95, 735		6.470		Extended Dominated	£31, 904	0.00%	7
Entecavir > Tenofovir	£112, 036		7.794		Extended Dominated	£43, 853	0.97%	2
Entecavir > Tenofovir + emtricitabine	£120, 244		7.862		Extended Dominated	£37, 001	0.61%	5
Tenofovir >	£125, 106	£77, 724	9.29	5.60	£13,858	£60,	87.11%	1

Strategy	Total	Inc. Cost	Total	Inc.	Cost per	At £20,000 threshold		
Entecavir			7	9		841		
Entecavir > Entecavir + Tenofovir	£130, 833		7.993		Dominated	£29, 024	0.01%	9
Tenofovir + emtricitabine > Entecavir	£148, 156	£23, 050	9.488	0.190	£121,174	£41, 595	5.39%	3

H.3.2 Sensitivity analyses

The results of the sensitivity analysis outlined in section H.2.4 can be found in Table 29. The results show that the cost effectiveness does not change in any of the analyses. The result is robust to even quite extreme changes to the base case. Some of the biggest differences are observed when the utilities are altered, either by using the SG values from Levey2008[50] or by reducing the discount rate. Even in these situations however the cost effective option remains the same. Increasing and reducing the costs also has little effect on the cost effective result. The only time that Tenofovir as a first line is not cost effective is when the cost of Tenofovir + Emtricitabine is reduced to almost equal with Tenofovir alone only £187 per year more expensive.

Table 29: Results of deterministic sensitivity analyses

	Most CE strategy¥	Δ Costs	Δ QALY	ICER
Base case				
Base case results (probabilistic)	Tenofovir >Entecavir	£77, 724	5.61	£13, 858
Base case results (deterministic)	Tenofovir >Entecavir	£68,867	4.67	£14,753
Sensitivity analyses (all deterministic)				
Natural History				
SA1: Setting the probability of HCC in people with DC equal to that in people with CC	Tenofovir >Entecavir	£68,170	4.61	£14,778
SA2: Setting the proportion of people that enter LT health state to 0	Tenofovir >Entecavir	£65,936	4.83	£13,654
Resistance				
SA3: 1% annual resistance to Tenofovir & Tenofovir + emtricitabine	Tenofovir >Entecavir	£68,830	4.62	£14,903
SA4: 2% annual resistance to Tenofovir & Tenofovir + emtricitabine	Tenofovir >Entecavir	£68,771	4.57	£15,034
SA5: 3% annual resistance to Tenofovir & Tenofovir + emtricitabine	Tenofovir >Entecavir	£68,702	4.53	£15,150
Withdrawal due to side effects				
SA6: Withdrawals with ADV and TDV set to 3%	Tenofovir >Entecavir	£68,702	4.53	£15,150
SA7: Withdrawals with ADV and TDV set to 6%	Tenofovir	£68,409	4.43	£15,430

	Most CE strategy¥	Δ Costs	Δ QALY	ICER
and ETV set to 3%	>Entecavir			
SA8: Withdrawals and resistance with TDV set to 3%	Tenofovir >Entecavir	£68,419	4.44	£15,422
Quality of life				
SA9: Using SG QoL values collected by Levey 2010	Tenofovir >Entecavir	£68,862	3.94	£17,458
Costs				
SA10: Using costs of progressive liver disease reported by Brown 2004 (inflated to 2010/11 values)	Tenofovir >Entecavir	£71,290	4.67	£15,272
SA11: Using costs of progressive liver disease reported by Wright 2006 (inflated to 2010/11 values)	Tenofovir >Entecavir	£51,191	4.67	£10,966
SA12: Threshold analysis of the cost of Tenofovir + emtricitabine	Tenofovir + emtricitabine > Entecavir is the most cost-effective strategy if the cost of Tenofovir + emtricitabine is equal to or less than £3,112			
Discount rates				
SA13: Discounting at 1.5% for QALYs and 3.5% for costs	Tenofovir >Entecavir	£68,900	6.21	£11,095

SG = standard gamble; QoL = quality of life

H.4 Discussion

H.4.1 Summary of results

The model shows that the cost effective strategy for treating decompensated cirrhosis is the strategy involving Tenofovir followed by a switch to Entecavir if resistance develops with an ICER of under £20,000 per QALY gained. The model is robust to changes to certain assumptions including the development of resistance to Tenofovir. In the base case there is no resistance to Tenofovir, however even when the resistance is raised to 6% per year this option is still cost effective. Other sensitivity analyses alter the cost effectiveness ratio but never change the chief result. This is true in all situations apart from the threshold analysis on the cost of the combination of Tenofovir and emtricitabine. In this analysis, the cost of the combination would have to be reduced by £2,167 to become only £187 more expensive per year than Tenofovir alone.

H.4.2 Limitations & interpretation

Patients reported that compensated cirrhosis was the health state associated with the greatest quality of life, which corresponds to clinical expectations of the disease. In the Woo 2012 study only had 7 people in the decompensated cirrhosis health state meaning that the confidence interval was very wide, ranging from 0.39 to 1 with a mean of 0.73. This means that there is a huge amount of uncertainty associated with this health state. The other health states are more certain with population sizes of n=79 for compensated cirrhosis, n=23 for HCC and n=30 for post-transplant. This has given them smaller confidence intervals as can be seen in Table 18.

Another area of uncertainty was that of the resistance rates. While no resistance has been reported for tenofovir over three years there is no available data for more longer than this

and no data for tenofovir resistance in adefovir resistant patients. Where no data was available, it was assumed that there was 0% resistance as this is what the trend from the previous 3 years had shown. The same is true for lamivudine and entecavir. Lamivudine resistance data in positive patients was available for 4 years, it was assumed that the resistance rates held steady at 70% thereafter. Entecavir resistance never went above 1.2% in Lamivudine naïve patients and it was also assumed to hold steady. It was possible that there would be increased resistance in one or all of these treatments but the lack of data prevented us from looking at this possibility.

Another limitation to the model is the assumption of 100% availability of livers for transplant. The treatments outlined above enable patients to remain either alive for longer or enable them to stay alive for long enough to receive a liver transplant. However, there are not always enough livers available for these people, meaning that they may in fact die before a liver becomes available. The mortality of these patients also has not been adjusted due to lack of available data for a relatively small number of patients.

H.4.3 Comparisons with published studies

One cost-effectiveness analysis of the treatment of people with cirrhosis due to CHB was identified in the literature. Kanwal 2006[39] compared lamivudine monotherapy, adefovir monotherapy, and entecavir monotherapy, lamivudine to adefovir salvage therapy, and lamivudine to entecavir salvage therapy. The base case assumed a population in which half had compensated cirrhosis and the other half decompensated cirrhosis. The results of the analysis showed that entecavir monotherapy was more effective and more expensive than adefovir monotherapy, with a cost of $25,626 in 2005 USD (£18,080 2009/10 GBP) per QALY gained. Due to an absence of randomised clinical evidence, our analysis did not include lamivudine as a treatment strategy in decompensated cirrhosis. We also did not include monotherapy treatments as the question was designed to address sequences and combinations. However, if we compare like-for-like adefovir and entecavir strategies from our analysis, we arrive at very similar results to those reported by Kanwal 2006[39]. Compared to adefovir followed by tenofovir, entecavir followed by tenofovir results in a cost of £18,360 per QALY; and compared to adefovir followed by tenofovir + emtricitabine, entecavir followed by tenofovir + emtricitabine costs £17,521 per QALY. This is quite close to the £18,080 ICER reported by Kanwal 2006[39].

Appendix I: Cost-effectiveness analysis – Treatment of patients with HBeAg positive CHB

I.1 Introduction

Hepatitis B is an infectious disease caused by the hepatitis B virus (HBV). HBV is a DNA virus that replicates its genome using reverse transcription. Depending on the interactions between several virus- and host-related variables, infection with the HBV may either undergo complete recovery with anti-HBV immunity or become chronic. Approximately one third of the world's population has serological evidence or past or present HBV infection and 350 to 400 million people have chronic HBV infection (EASL 2012). In the UK, an estimated 326,000 people are thought to have chronic hepatitis B (CHB).

HBV infects the liver cells, leading to an immune response in which infected cells are killed but the infection is not eliminated. Over many years, HBV infection can lead to the development of cirrhosis, liver failure, and cancer. Mortality is increased, with 25% to 40% of people with CHB dying from complications of liver disease. Although the ultimate goal of

therapy is to prevent progression of liver disease, more immediate therapeutic goals are to achieve a sustained off-treatment immune control of the infection as indicated by suppression of HBV DNA, HBeAg seroconversion and HBsAg seroconversion.
Currently, there are seven drugs licensed for the treatment of hepatitis B in England and Wales: standard interferon-alfa (IFN-α); pegylated-interferon-alfa-2a (peg-IFN α2a α2a); lamivudine (LAM), adefovir dipivoxil (ADV); tenofovir (TDF); telbivudine (TdF), and entecavir (ETV). IFN (standard and pegylated) is an immunomodulator that acts by initiating cytotoxic T-cell activity causing lysis of infected hepatocytes and by promoting cytokine production for control of viral replication. The nucleos(t)ide analogues (LAM, ADV, TDF, TdF and ETV) inhibit viral replication by targeting the reverse transcriptase activity of the HBV polymerase.
There are two different treatment strategies for people with CHB: treatment of finite duration with (peg-)IFN followed by NA therapy for those who fail treatment, and long-term treatment with NA(s). A major limitation of nucleos(t)ide analogues (NA) is the selection of HBV resistant variants, which can lead to a rebound in HBV replication and exacerbation of HBV-related disease. Antiviral resistance is now considered the single most important factor in treatment failure in CHB. The same HBV polymerase gene variants that mediate HBV resistance to lamivudine are known to confer cross-resistance to other NAs (TdF and ETV). In cases of resistance, an appropriate rescue therapy should be initiated. This may mean that the patient is switched to a complimentary drug with a high barrier to resistance. A relatively recent concept in the management of antiviral resistance is the superiority of add-on therapy rather than switching as a means of preventing the development of subsequent multidrug resistant isolates. Which initial and rescue therapy, and whether rescue therapy should be given alone or in combination, is an issue of considerable uncertainty. Each alternative is associated with different benefits, side effects and costs.
The systematic review of the economic literature revealed that there is a substantial evidence base covering various aspects of pharmacological treatment; however, the majority have poor applicability to the UK, none include all comparators of interest and all have methodological limitations that could affect conclusions about cost-effectiveness. The aim of this model was to undertake a comprehensive economic evaluation of alternative antiviral treatments for CHB in order to recommend the most cost-effective combination or sequence of drugs for the treatment of CHB.
The GDG considered questions about pharmacological treatment for CHB to be the highest priority for original economic analysis. The model was therefore developed to answer the question related to which sequences and combinations should be used to treat people with CHB. The model built on the previous model that looked at decompensated cirrhosis and incorporated the findings of this model into the analysis the decompensated cirrhosis model can be found in Appendix H. The analysis was also used as a foundation in order to evaluate the whether tailoring treatment to hepatitis B genotype (following genotype testing) would represent a cost-effective use of NHS resources. The genotyping analysis is presented within this analysis.

How this economic evaluation fits within existing NICE guidance
Current guidance from NICE Technology Appraisals states that: • Pegylated interferon alfa-2a is recommended as an option for the initial treatment of adults with chronic hepatitis B (HBeAg positive or HBeAg negative), within its licensed indications (TA96). • Entecavir, within its marketing authorisation, is recommended as an option for the treatment of people with chronic HBeAg-positive or HBeAg-negative hepatitis B in whom antiviral treatment is indicated (TA153). • Tenofovir disoproxil, within its marketing authorisation, is recommended as an option for the treatment of people with chronic HBeAg-positive or HBeAg-negative hepatitis B in whom antiviral treatment is indicated (TA173). • Telbivudine is not recommended for the treatment of chronic hepatitis B (TA154). These recommendations will be incorporated into the guideline while allowing for further

How this economic evaluation fits within existing NICE guidance
guidance to be given on the appropriate use of the recommended options within treatment sequences and combinations.
Given additions to the evidence base and the introduction of new drugs (TA173), this guideline has been tasked with updating existing NICE TA 96 which states that: • Adefovir dipivoxil is recommended as an option for the treatment of adults with chronic hepatitis B (HBeAg positive or HBeAg negative) within its licensed indications if: o treatment with interferon alfa or peginterferon alfa-2a has been unsuccessful, or o a relapse occurs after successful initial treatment, or o treatment with interferon alfa or peginterferon alfa-2a is poorly tolerated or contraindicated. • Adefovir dipivoxil should not normally be given before treatment with lamivudine. It may be used either alone or in combination with lamivudine when: o treatment with lamivudine has resulted in viral resistance, or o lamivudine resistance is likely to occur rapidly (for example, in the presence of highly replicative hepatitis B disease), and development of lamivudine resistance is likely to have an adverse outcome (for example, if a flare of the infection is likely to precipitate decompensated liver disease).

I.2 Methods

I.2.1 Model overview

I.2.1.1 Population

CHB was defined as the presence of hepatitis B surface antigen for at least six months and a viral load of more than 300 copies per mL. People co-infected with HIV were excluded. There are two molecular variants of the HBV: Hepatitis B e antigen (HBeAg)-positive and HBeAg-negative CHB. HBeAg-positive hepatitis B is the most common form of the disease in Europe and North America. HBeAg-negative CHB arises due to the selection of precore or other HBV mutant strains unable to produce HBeAg during the course of HBeAg-positive infection.[5] This form of the disease is associated with worse outcomes than HBeAg-positive CHB and there is evidence that it may soon become the predominant form of CHB in most countries.[28]

The model was developed to consider each population in turn; a hypothetical population of HBeAg positive, nucleos(t)ide-naïve adults (aged ≥ 18 years) with detectible HBV DNA and evidence of active liver disease for whom antiviral treatment (interferon or nucleos(t)ide therapy) is considered appropriate, and a hypothetical population of HBeAg negative adults with detectable HBV DNA.

Comparators

The model was developed to evaluate the cost-effectiveness different monotherapies and combination nucleos(t)ide treatments after a prescribed course of peg-IFN α2a or following the development of drug resistance to the initial NA therapy. In practice, there are several factors which influence the selection of sequential treatment options. Based on *in vitro* and *in vivo* studies, it is well recognised that resistance to LAM confers cross-resistance to other nucleosides that share the same site of action (L-Nucleosides) and reduces sensitivity to ETV (Table 1). Conversely, mutants that are resistant to ADV generally remain sensitive to L-nucleosides and ETV (Table 1). When patients are treated sequentially with drugs that have overlapping resistance profiles, the second therapy is not only less effective, but may also

lead to multidrug resistance.[92] Another factor guiding the selection of appropriate treatment alternatives is that certain drugs may cause renal toxicity when used in combination (Adefovir and Tenofovir).

Four rules were laid down prior to selecting the treatments to go into the analysis:

1. ADV would not be part of any treatment sequence on the basis that TDF, the other drug that targets the same molecular sight, is both cheaper and more effective.
2. No treatment sequence would be used that would confer a risk of toxicity when starting the second treatment.
3. No treatment sequence would be used that would confer cross resistance between the first and second treatment.
4. No treatment sequence that used LAM alone (i.e. not in combination) would be evaluated as the rate of resistance is too high (80% over five years) for it to be considered in regular practice. It may however be used in conjunction with other treatments as this prevents the increase of resistance.

A list of all included treatment sequences is presented in Table 2. The included comparators came from a larger list of all possible combinations however most of these were excluded on the basis of the above rules. Table 3 includes a list of all excluded comparators, along with the reason for its exclusion.

If a patient infected with virus develops resistance to the second drug, it is assumed that they stop all antiviral treatment (receiving best supportive care from then onwards).

Combinations of NAs were not included as first line therapies within the model. Because peg-IFN α2a plus LAM as first line therapy was evaluated in trials included within the clinical review, the GDG decided to include this strategy within the model. Because there have been no trials of peg-IFN α2a plus newer NAs for treatment naïve patients, these combinations were not included in the model.

Peg-IFN α2b and emtricitabine + TDF (Emtricitabine plus tenofovir) were not included as comparators in the model because there are currently no published RCTs of Peg-IFN α2b or Emtricitabine plus tenofovir compared to any other therapy included in the clinical review. Therefore, these drugs could not be included in the network meta-analysis (see Appendix J).

TdF is not included as a comparator in the model as it is not currently recommended as part of the treatment pathway for patients with hepatitis B (TA 154).

Table 30: Antiviral cross resistance in CHB – From Zoulim 2012[92] and Zoulim & Locarnini 2009[91]

Pathway	Mutation variant	LMV	ETV	ADV	TFV
	Wild type	S	S	S	S
L-nucleoside (LMV)	M204I/V	R	I	S	S
Acyclic phosphate (ADV)	N236T	S	S	R	I
Shared (LMV, ADV)	A181T/V	R	S	R	I
Double (ADV, TFV)	A181T/V + N236T	R	S	R	R
D-Cyclopentane (ETV)	L180M + M204V/I ± I169 ± T184	R	R	S	S

I = intermediate sensitivity; R = resistant; S = sensitive. Telbivudine has been omitted from the original table as it is not a comparator in our model (as per TA 154).

Table 31: Comparators included in the model

#	Sequential drug therapy (add-on or monotherapy)
	No treatment (placebo)
2	Pegylated interferon alfa 2a → Tenofovir → Entecavir
3	Pegylated interferon alfa 2a → Entecavir → Tenofovir
4	Pegylated interferon alfa 2a → Tenofovir → Tenofovir + Lamivudine
5	Pegylated interferon alfa 2a → Tenofovir → Tenofovir + Entecavir
6	Pegylated interferon alfa 2a → Entecavir → Entecavir + Tenofovir
7	Pegylated interferon alfa 2a → Entecavir → Tenotofir + Lamivudine

#	Sequential drug therapy (add-on or monotherapy)
8	Pegylated interferon alfa 2a+ Lamivudine → Tenofovir → Entecavir
9	Pegylated interferon alfa 2a + Lamivudine → Entecavir → Tenofovir
10	Pegylated interferon alfa 2a + Lamivudine → Tenofovir → Tenofovir + Lamivudine
11	Pegylated interferon alfa 2a + Lamivudine → Tenofovir → Tenofovir + Entecavir
12	Pegylated interferon alfa 2a + Lamivudine → Entecavir → Entecavir + Tenofovir
13	Pegylated interferon alfa 2a + Lamivudine → Entecavir → Tenofovir + Lamivudine
14	Tenofovir → Entecavir
15	Entecavir → Tenofovir
16	Tenofovir → Tenofovir + Lamivudine
17	Tenofovir → Tenofovir + Entecavir
18	Entecavir → Entecavir + Tenofovir
19	Entecavir → Tenofovir + Lamivudine

Table 32: Excluded comparators

#	Sequential drug therapy (add-on or monotherapy)	Reason for exclusion
5	Pegylated interferon alfa 2a → Tenofovir → Adefovir	Cross resistant *
6	Pegylated interferon alfa 2a → Entecavir → Lamivudine	Cross resistant
7	Pegylated interferon alfa 2a → Lamivudine → Lamivudine + Entecavir	Cross resistant
8	Pegylated interferon alfa 2a → Adefovir → Adefovir + Tenofovir	Toxic
9	Pegylated interferon alfa 2a → Tenofovir → Tenofovir + Adefovir	Toxic
10	Pegylated interferon alfa 2a → Entecavir → Entecavir + Lamivudine	Cross resistant
11	Pegylated interferon alfa 2a → Lamivudine → Adefovir	LAM alone and ADV
12	Pegylated interferon alfa 2a → Lamivudine → Tenofovir	LAM alone
13	Pegylated interferon alfa 2a → Adefovir → Lamivudine	LAM alone and ADV
14	Pegylated interferon alfa 2a → Adefovir → Tenofovir	ADV
15	Pegylated interferon alfa 2a → Adefovir → Entecavir	ADV
16	Pegylated interferon alfa 2a → Tenofovir → Lamivudine	LAM alone
17	Pegylated interferon alfa 2a → Entecavir → Adefovir	ADV
18	Pegylated interferon alfa 2a → Lamivudine → Lamivudine + Adefovir	LAM alone
19	Pegylated interferon alfa 2a → Lamivudine → Lamivudine + Tenofovir	LAM alone
20	Pegylated interferon alfa 2a → Adefovir → Adefovir + Lamivudine	ADV
21	Pegylated interferon alfa 2a → Adefovir → Adefovir + Entecavir	ADV
22	Pegylated interferon alfa 2a → Entecavir → Entecavir + Adefovir	ADV
23	Pegylated interferon alfa 2a → Entecavir → Adefovir + Lamivudine	ADV
24	Pegylated interferon alfa 2a + Lamivudine → Lamivudine → Adefovir	ADV
25	Pegylated interferon alfa 2a + Lamivudine → Lamivudine → Tenofovir	LAM alone
26	Pegylated interferon alfa 2a + Lamivudine → Adefovir → Lamivudine	ADV

#	Sequential drug therapy (add-on or monotherapy)	Reason for exclusion
27	Pegylated interferon alfa 2a + Lamivudine → Adefovir → Tenofovir	ADV
28	Pegylated interferon alfa 2a + Lamivudine → Adefovir → Entecavir	ADV
29	Pegylated interferon alfa 2a + Lamivudine → Tenofovir → Lamivudine	LAM alone
30	Pegylated interferon alfa 2a + Lamivudine → Entecavir → Adefovir	ADV
31	Pegylated interferon alfa 2a + Lamivudine → Lamivudine → Lamivudine + Adefovir	LAM alone
32	Pegylated interferon alfa 2a + Lamivudine → Lamivudine → Lamivudine + Tenofovir	LAM alone
33	Pegylated interferon alfa 2a + Lamivudine → Adefovir → Adefovir + Lamivudine	ADV
34	Pegylated interferon alfa 2a + Lamivudine → Adefovir → Adefovir + Entecavir	ADV
35	Pegylated interferon alfa 2a + Lamivudine → Entecavir → Entecavir + Adefovir	ADV
36	Pegylated interferon alfa 2a + Lamivudine → Entecavir → Adefovir + Lamivudine	ADV
37	Pegylated interferon alfa 2a +Lamivudine → Tenofovir → Adefovir	Cross resistant *
38	Pegylated interferon alfa 2a +Lamivudine → Entecavir → Lamivudine	Cross resistant
39	Pegylated interferon alfa 2a +Lamivudine → Lamivudine → Lamivudine + Entecavir	Cross resistant
40	Pegylated interferon alfa 2a +Lamivudine → Adefovir → Adefovir + Tenofovir	Toxic
41	Pegylated interferon alfa 2a +Lamivudine → Tenofovir → Tenofovir + Adefovir	Toxic
42	Pegylated interferon alfa 2a + Lamivudine → Entecavir → Entecavir + Lamivudine	Cross resistant
43	Lamivudine → Adefovir	LAM alone and ADV
44	Lamivudine → Tenofovir	LAM alone
45	Adefovir → Lamivudine	LAM alone and ADV
46	Adefovir → Tenofovir	ADV
47	Adefovir → Entecavir	ADV
48	Tenofovir → Lamivudine	LAM alone
49	Entecavir → Adefovir	ADV
50	Lamivudine → Lamivudine + Adefovir	LAM alone and ADV
51	Lamivudine → Lamivudine + Tenofovir	LAM alone
52	Adefovir → Adefovir + Lamivudine	ADV
53	Adefovir → Adefovir + Entecavir	ADV
54	Lamivudine → Entecavir	Cross resistant
55	Tenofovir → Adefovir	Cross resistant *
56	Entecavir → Lamivudine	Cross resistant
57	Lamivudine → Lamivudine + Entecavir	Cross resistant
58	Adefovir → Adefovir + Tenofovir	Toxic
59	Tenofovir → Tenofovir + Adefovir	Toxic

#	Sequential drug therapy (add-on or monotherapy)	Reason for exclusion
60	Entecavir → Entecavir + Adefovir	Cross resistant
61	Entecavir → Entecavir + Lamivudine	Cross resistant

** Although Tenofovir resistance has not been described, the GDG considered these to be instances of likely cross resistance because Adefovir is from the same group of drugs.*

I.2.1.2 Time horizon, perspective, discount rates used

The analysis was undertaken from the perspective of the NHS and personal social services, in accordance with NICE guidelines methodology.[63] Relevant costs consisted of the cost of each antiviral drug, monitoring during therapy, and costs associated with progressive liver disease. All costs are reported in 2010/11 British pounds. The primary measure of outcome is the quality-adjusted life-year (QALY). The model was evaluated over a lifetime horizon with both costs and QALYs discounted at a rate of 3.5% per year. Alternative discount rates of 1.5% for QALYs and 3.5% for costs were explored in sensitivity analysis.

I.2.2 Approach to modelling

The natural history of chronic HBV infection can be divided into distinct phases of variable duration, characterised and diagnosed on the basis of HBeAg/anti-HBe serology, serum HBV DNA levels, and alanine aminotransferase (ALT) activity. In order to estimate the impact of short-term serological and virological changes on the long-term outcomes of people with CHB, a model illustrating the natural history of CHB was required. Disease progression was modelled as movements between 11 disease states of a Markov transition model (Figure 8). The effectiveness of each antiviral drug was estimated by applying treatment effects from the clinical review to the natural (baseline) rate of progression to HBeAg seroconversion and undetectable HBV DNA. Five-year rates of resistance to each drug were collected from the clinical literature. Upon developing resistance to a drug, patients were switched to another. HBeAg positive individuals were also eligible to 'serorevert' at rates dependant on type of antiviral drug they were treated with (Peg-IFN α2a, nucleotides, and nucleosides). Therefore, differences between treatments are driven by the proportion of patients achieving HBeAg seroconversion, undetectable HBV DNA, rates of seroreversion, and development of drug resistance. By changing patients' serological, biochemical, histological or virological status, different antiviral drugs lead to differential rates of progression to health states in which they are more or less likely to develop progressive liver disease, HCC, liver transplantation, and death.

The model assumed that people may experience spontaneous improvements in their condition or reductions in viral load but the effect of treatment is to increase the probability of viral suppression and inactive carrier above the levels observed in untreated patients. The model also allows for any anti-viral treatment to have an impact on prognosis for patients in certain states, irrespective of viral load and type of treatment. Treatment has an impact on the risk of progression of disease. Patients will lose viral load at different rates depending on treatment.

I.2.2.1 Model structure

A Markov model was developed using TreeAge Pro 2009[81](NEED TO ADD REFERENCE) to illustrate the varying stages of disease severity associated with CHB. The structure of the model and transition rates between each health state were based on models reported by Dakin 2010[16], Wong 2011[85], and Shepherd 2006[76], and discussions with the GDG. Patients entered the model with active CHB and compensated cirrhosis according to proportions observed in the baseline populations of the included clinical trials (Table 5). Patients entering the model received one of the treatment strategies described in Table 2 and can transition between health states according to the model structure defined in Figure 1: Markov State diagram

According to the relative rates observed in the clinical trials, patients could achieve undetectable HBV DNA or HBeAg seroconversion. As outlined in the network meta-analysis

conducted as part of the clinical review, the probability of each was treated independently (i.e. a competing risks model was not used). This is consistent with the NMA and model by developed by Dakin 2010[16].

Viral suppression was defined by a viral load of less than 300 copies per ml. This is the lower limit of detection for viral assays commonly used in clinical trials, in routine practice, and was the threshold used in the clinical review. As reported by the REVEAL trial[10], viral load was assumed to be an important factor in disease progression in the model, with transitions to compensated cirrhosis, hepatocellular carcinoma (HCC), and death being lower for people with undetectable HBV DNA.

As a result of immunological control of the infection, the HBeAg seroconverted state confers a favourable long-term outcome with a very low risk of cirrhosis or HCC in the majority of patients. In contrast to other published models; in our model, individuals who achieved HBeAg seroconversion may not transition directly to compensated cirrhosis; they must first regress to an active viremic phase.

People who undergo HBeAg seroconversion are at risk of spontaneous reactivation of the disease. Although previous published economic evaluations have assumed that reactivation of disease may be more likely in the year following a treatment-induced HBeAg seroconversion, for the sake of simplicity the current model assumes that the probability of seroreversion is unrelated to the time spent in that state or whether the transition to inactive carrier was induced by treatment.

It was conservatively assumed that nucleos(t)ide treatment did not affect the probability of HBsAG seroconversion, as very few trials identified in the systematic review reported data on HBsAg seroconversion. HBsAg seroconversion was assumed to be a permanent state with no possibility of reactivating CHB. People in this state were assumed to be at no greater risk of developing progressive liver disease than in those without CHB.

HBeAg negative CHB is for some patients a later phase of the natural history of CHB. In the model, a proportion of patients with HBeAg positive CHB may develop HBeAg negative CHB, or may transition from HBeAg seroconversion to active HBeAg negative CHB. This is in contrast to the majority of models in the literature which do not allow for transitions from one population to the other. Based on discussions with the GDG and agreement with the literature, we believe the inclusion of this transition model results in a more comprehensive representation of the disease process.

All individuals in the model are at risk of developing HCC, but the risk is greater for patients with disease progression. The lowest risk is for HBsAg seroconverted individuals and the greatest risk is for those with cirrhosis. It is assumed that patients can only develop decompensated cirrhosis if they have first developed compensated cirrhosis.

All individuals in the model are exposed to a background rate of all-cause mortality for people with CHB on an annual basis.

Figure 8: Schematic Markov model structure – HbeAg positive CHB

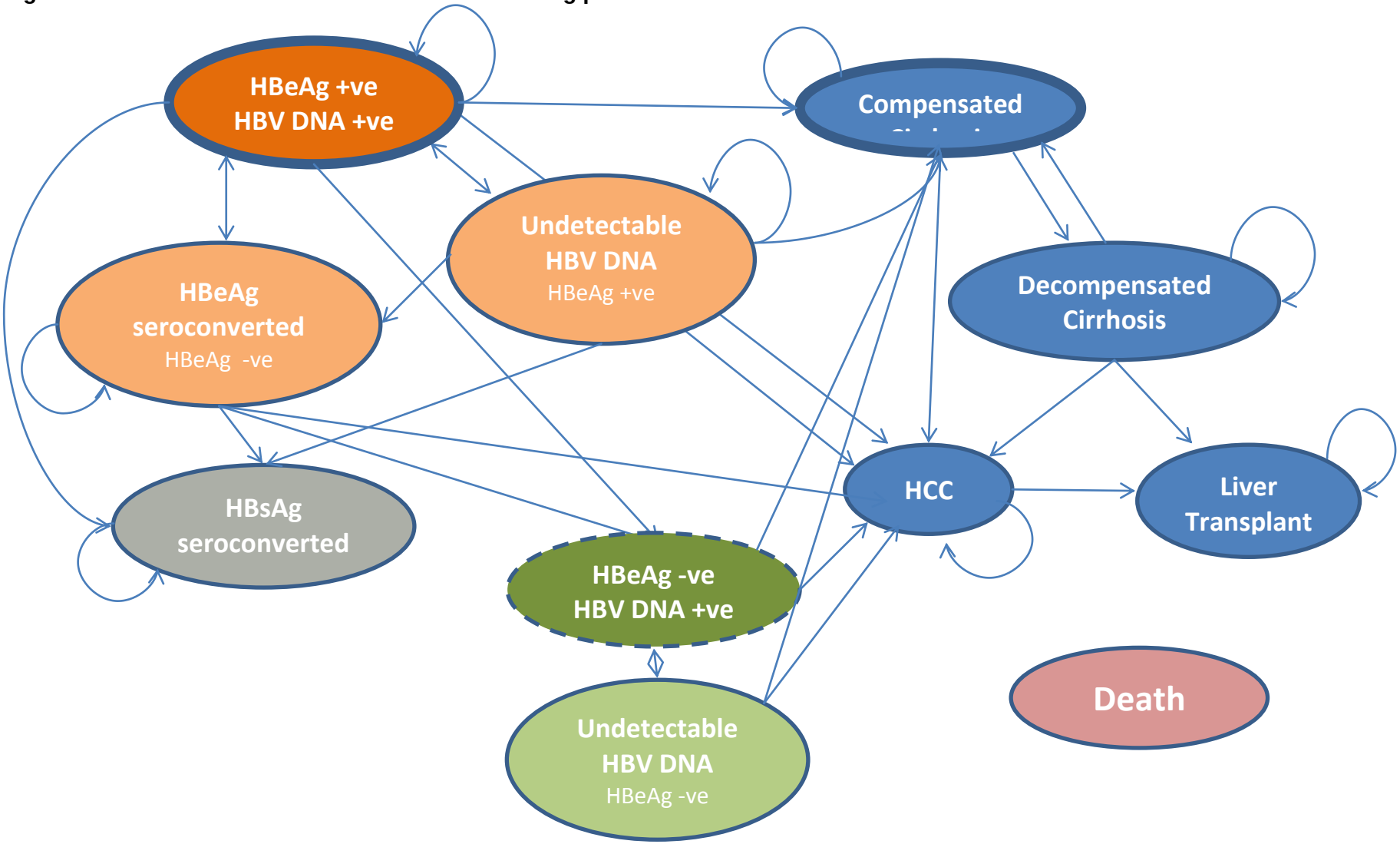

<Please insert your copyright statement - one line of text entry only>

I.2.2.2 Uncertainty

The model was built probabilistically to take account of the uncertainty surrounding each input parameter. In order to characterise uncertainty, a probability distribution was defined for each parameter based on error estimates from the data sources (e.g. standard errors or confidence intervals). The way in which distributions are defined reflects the nature of the data (Table 4). When the model was run, a value for each input was randomly selected from its respective distribution. The model was run repeatedly (1000 times) to obtain mean cost and QALY values.

Various sensitivity analyses were also undertaken to test the robustness of model assumptions and data sources. In these analyses, one or more inputs were changed and the analysis was rerun in order to evaluate the impact of these changes on the results of the model.

Table 33: Distributions used in probabilistic cost-utility analysis

Parameter	Type of distribution	Properties of distribution	Parameters for the distributions
Relative risk & odds ratios	Normal	Calculated on log scale to bound at 0	Mean (M) Standard Deviation (SD)
Costs	Gamma	Bound between zero and infinity	α = (mean/standard error of the mean)^2 γ = mean/standard error of the mean^2
Probabilities (& mean baseline utility)	Beta	Bound between zero and one	α = events β = sample size - α

I.2.3 Model inputs

I.2.3.1 Summary table of model inputs

Model inputs were based on clinical evidence identified in the systematic review undertaken for the guideline, supplemented by additional data sources as required. Model inputs were validated with clinical members of the GDG. A summary of the model inputs used in the base-case (primary) analysis is provided in Table 5 below. More details about sources, calculations and rationale for selection can be found in the sections following this summary table.

Table 34: Overview of parameters and parameter distributions used in the model

Parameter description	Point estimate	Probability distribution	Distribution parameters
Baseline Risk			
Active CHB to HBsAg seroconversion positive	1.80%	Beta	α: 40.565 β: 2213.03
Active CHB to HBeAg seroconversion positive (rate)	10.70%	Gamma	α: 44.315 λ: 391.59
HBeAg seroconversion to active CHB positive (rate)	0.49%	Gamma	α: 8.929 λ: 1811.04
HBeAg positive CHB to HBeAg negative CHB	5.00%	Beta	α: 14.003 β: 266.06

Parameter description	Point estimate	Probability distribution	Distribution parameters
Active CHB to undetectable HBV DNA – positive	5.30%	Gamma	α: 10.441 λ: 190.08
Undetectable HBV DNA to active CHB positive and negative	12.50%	Beta	α: 2.665 β: 18.66
Active CHB to compensated cirrhosis positive (rate)	5.30%	Gamma	α: 4.666 λ: 86.40
HBeAg seroconverted to HBsAg seroconversion - positive	70.00%	Beta	α: 0.700 β: 98.41
HBeAg seroconverted to HBeAg negative CHB	2.80%	Beta	α: 97.172 β: 3373.26
HBeAg seroconverted to HCC	20.00%	Beta	α: 0.482 β: 236.16
Undetectable HBV DNA to HBeAg seroconverted positive	5.30%	Beta	α: 2.766 β: 48.93
Undetectable HBV DNA to HBsAg seroconversion positive	1.80%	Beta	α: 50.889 β: 2776.27
Undetectable HBV DNA to HCC - positive	0.10%	Beta	α: 4.834 β: 4389.33
Undetectable HBV DNA to compensated cirrhosis - positive	1.60%	Beta	α: 4.162 β: 248.24
Compensated cirrhosis to HCC	2.30%	Beta	α: 7.329 β: 306.93
Compensated cirrhosis to decompensated cirrhosis (no treatment)	5.00%	Beta	α: 6.889 β: 130.90
Decompensated cirrhosis to compensated cirrhosis (no treatment)	0.00%		
Decompensated cirrhosis to HCC	2.90%	Beta	α: 4.602 β: 161.29
Decompensated cirrhosis to liver transplant	1.60%	Beta	α: 0.064 β: 3.96
HCC to liver transplant	1.60%	Beta	α: 4.124 β: 253.65
HBeAg negative/HBV DNA positive to HBsAg seroconversion	0.40%	Beta	α: 3.980 β: 991.02
HBeAg negative/HBV DNA positive to HBeAg negative with undetectable HBV DNA (rate)	4.80%	Gamma	α: 1.515 λ: 30.77
HBeAg negative with undetectable HBV DNA to HBeAg negative with detectable HBV DNA	12.50%	Beta	α: 2.665 β: 18.66
HBeAg negative with undetectable HBV DNA to HBsAg seroconversion	0.70%	Beta	α: 0.700 β: 98.41
HBeAg negative/HBV DNA positive to HBV DNA positive CC	9.00%	Beta	α: 3.550 β: 35.89
HBeAg negative active CHB to HCC	0.50%	Beta	α: 1.550 β: 308.39
Undetectable HBV DNA to compensated	0.50%	Beta	α: 2.279

Parameter description	Point estimate	Probability distribution	Distribution parameters
cirrhosis			β: 453.56
HBeAg negative undetectable CHB to HCC	0.50%	Beta	α: 1.550 β: 308.39
HBeAg negative compensated cirrhosis to HCC	2.30%	Beta	α: 7.329 β: 306.93
HBeAg negative compensated cirrhosis to DC (no treatment)	5.00%	Beta	α: 6.889 β: 130.90
HBeAg negative DC to compensated cirrhosis (no treatment)	0.00%		
HBeAg negative DC to HCC	2.90%	Beta	α: 4.602 β: 161.29
HBeAg negative DC to Liver Transplant	1.60%	Beta	α: 0.064 β: 3.96
HBeAg negative HCC to Liver Transplant	1.60%	Beta	α: 4.124 β: 253.65
Treatment effects			
HBeAg seroconversion at 48 weeks (26 weeks follow up for PegIFN comparators) in HBeAg positive CHB (Nucleoside naïve)			
Peg-INF alfa 2a	3.72	Normal	SD: 0.196
Peg-INF alfa 2a + Lamivudine	3.12	Normal	SD: 0.183
Lamivudine	2.35	Normal	SD: 0.159
Tenofovir	2.70	Normal	SD: 0.443
Entecavir	2.43	Normal	SD: 0.115
HBeAg seroconversion at 48 weeks in HBeAg positive CHB (Lamivudine Resistant)			
Tenofovir	7.23	Normal	SD: 5.925
Entecavir	2.10	Normal	SD: 7.195
Undetectable DNA in HBeAg positive CHB at 48 weeks (26 weeks follow up for PegIFN comparators) - Nucleoside naïve			
Peg-INF alfa 2a	84.71	Normal	SD: 0.2675
Peg-INF alfa 2a + Lamivudine	79.09	Normal	SD: 0.3186
Lamivudine	25.60	Normal	SD: 0.0339
Tenofovir	61.01	Normal	SD: 0.1771
Entecavir	42.85	Normal	SD: 0.2002
Undetectable DNA in HBeAg negative CHB at 48 weeks (26 weeks follow up for PegIFN comparators) - Nucleoside naïve			
Peg-INF alfa 2a	29.45	Normal	SD: 0.0980
Peg-INF alfa 2a + Lamivudine	30.97	Normal	SD: 0.0699
Lamivudine	10.12	Normal	SD: 0.1030
Tenofovir	13.85	Normal	SD: 0.1639
Entecavir	13.63	Normal	SD: 0.3444
Undetectable DNA in HBeAg positive CHB at 48 weeks (Lamivudine Resistant)			
Tenofovir	39.17	Normal	SD: 8.6618
Entecavir	12.05	Normal	SD: 6.1069
Cost (£)			
Peg INF α 2a (Pegasys)	£5971 (cost of	NA	List price

Parameter description	Point estimate	Probability distribution	Distribution parameters
	48 week course)		
Lamivudine (Zeffix)	£1,015	NA	List price
Adefovir (Hepsera)	£3,610	NA	List price
Entecavir (Baraclude)	£4,420	NA	List price
Entecavir (Baraclude)	£4,420	NA	List price
Tenofovir (Viread)	£2,925	NA	List price
Monitoring			
Total cost of monitoring pegIFN α 2a	£812.34	Gamma	α: 47.39 λ:0.58
Total cost of monitoring Entecavir and Lamivudine	£870.98	Gamma	α: 100.23 λ: 0.12
Total cost of monitoring Tenofovir	£865.70	Gamma	α: 101.33 λ: 0.12
Costs of Liver disease			
Compensated cirrhosis	£2,235	Gamma	α: 61.07 λ:0.0273
Decompensated cirrhosis[¥]	£8,930	Gamma	α: 61.25 λ:0.0069
Hepatocellular carcinoma	£9,427	Gamma	α: 61.30 λ:0.0065
Transplantation	£47,737	Gamma	α: 61.28 λ:0.0013
First year post transplant	£16,357	Gamma	α: 61.31 λ:0.0037
Post-transplant	£10,210	Gamma	α: 61.21 λ:0.0060
Utilities			
Non-cirrhotic CHB	0.87	Beta	α: 147.42 β: 34.58
Compensated cirrhosis	0.81	Beta	α: 6.03 β: 6.28
Decompensated cirrhosis	0.49	Beta	α: 52.67 β: 9.29
Hepatocellular carcinoma	0.85	Beta	α: 39.60 β: 15.40
Post-liver transplant	0.72	Beta	α: 1748.41 β: 261.26

I.2.3.2 Initial cohort settings

Baseline characteristics for CHB patients were taken from the RCTs included in the clinical review.

From Fattovich 2003[24]:

At the time of initial presentation, the median age of adult patients with HBeAg positive CHB is 31 years (range 24 to 36). Men usually outnumber women and the male to female ratio ranges from 1.5 to 4.9. Active cirrhosis is seen in 10% to 24% or people with HBeAg positive CHB.
Patients with HBeAg negative CHB are usually older than patients with HBeAg positive CHB with a median age of 40 (range 36 to 45 years). The male to female ratio ranges from 3.9 to 17. Current data indicate that the clinical profile of HBeAg negative CHB differs from that seen in patients with HBeAg positive CHB; in a large series from the Mediterranean area, 29% to 38% of patients had cirrhosis at the time of their first presentation.

I.2.3.3 Baseline event rates

Patients enter the model in one of the two health states identified in Figure 9 with a bold blue border (Active CHB – HbeAg positive, and Compensated Cirrhosis), according to the cohort settings described in section I.2.3.2. An analysis that starts all patents in an e antigen negative population is looked at in a sensitivity analysis. The probability of transitioning between each health state in Figure 9 is described in

Table **35**, along with the data sources and rationale used to estimate each value. Circular arrows indicate residual probabilities (i.e. one minus the sum of all other transition probabilities out of that health state).
All individuals in the model are exposed to a background rate of mortality for people with CHB. There is an excess risk of mortality associated with certain states. The sources and calculations used to inform these values are outlined under 'Life Expectancy' in section I.2.3.4.
Not all probabilities are available at the appropriate time point, some data is from studies longer than one year and other data are from a shorter time period. In order to make sure that all the transition probabilities are calculated for one year the data must be transformed to its underlying rate, and then back into a probability. An example of how this is done can be found below:
E.g. From Hsu 2002[35]: *"12 out of 283 people experienced HBeAg positive seroreversion over a median of 8.6 years"*
In order to calculate this as an annual probability, the probability of patients seroreverting is taken at 8.6 years, which is quite simply:

$$=$$

$$= 0.0424\ (4.24\%)$$

Then this probability must be converted to an underlying rate at 1 year. This is done by transforming the probability to a rate on the natural log scale and dividing it by the total time in years:

$$= 0.00504$$

This rate can then simply be transformed back to a probability by taking the exponent of the natural log:

$$= 0.00503\ (0.5\%)\ \text{per year}$$

This same set of equations is used to convert any rate or probability that is not at one year to a one year probability in the model.

Figure 9: Baseline transition probabilities

HBeAg positive CHB

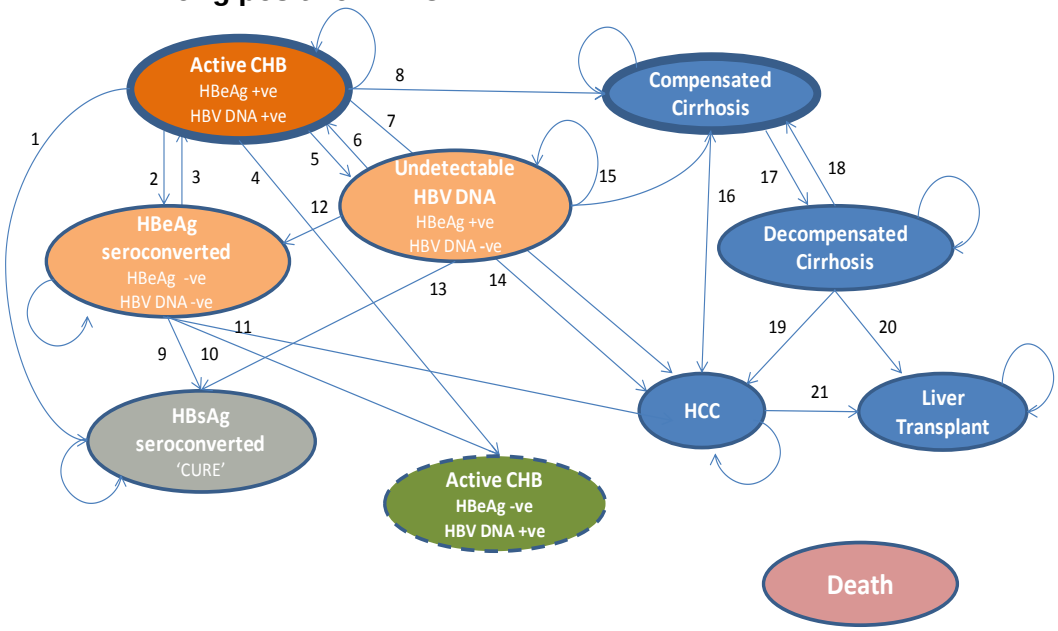

HBeAg negative CHB

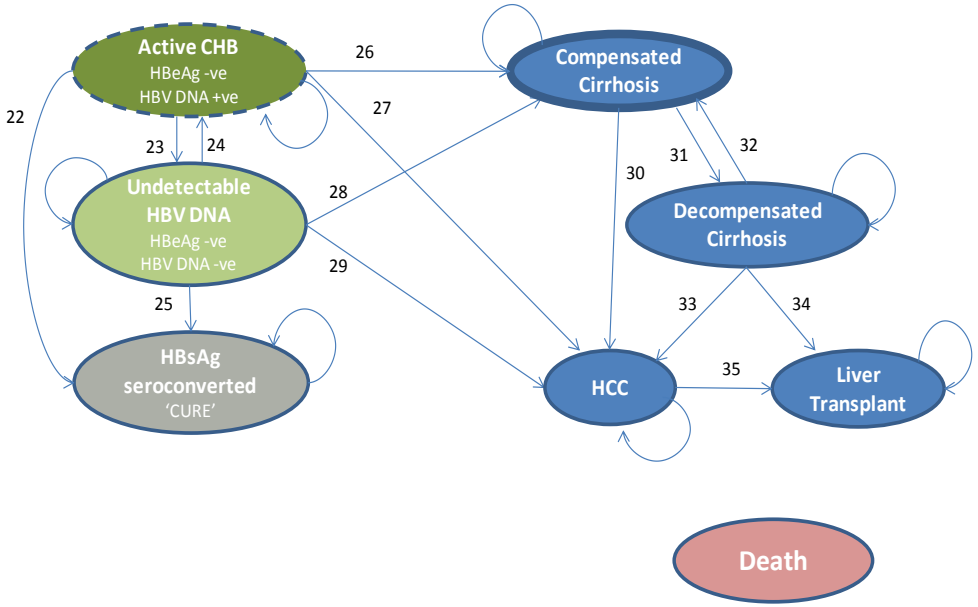

Table 35: Baseline (natural history) transition probabilities for people with HBeAg positive and HBeAg negative CHB

Transition (Figure 9)	Parameter description	Mean probability	95% Confidence Interval	Source
7	Active CHB to HBsAg seroconversion positive	1.8%	0.0% to 2.3%	In Western patients, spontaneous HBsAg clearance occurs during chronic HBV infection at an annual rate of 1% to 2%. The mean probability and range used in this model were based on values used by Dakin 2010[16] and attributed to Wong 1995[86].
8	Active CHB to HBeAg seroconversion positive	10.7%	5.6% to 17.7%	Based on Dakin 2010[16] and Wong 1995[86]. It is greater than that of the control arms of trials included in the current clinical review (13 out of 230 patients in Marcellin 2003[59] and Dienstag 1999[22] achieved HBeAg seroconversion over one year; equal to an

Transition (Figure 9)	Parameter description	Mean probability	95% Confidence Interval	Source
				annual probability of 5.5% and a 95% confidence interval of 3.2% to 9.3%). The GDG felt that the population in the Dakin 2010 study more accurately reflected their expectations for this transition based on clinical experience.
9	HBeAg seroconversion to active CHB positive	0.5%	0.3% to 0.9%	A long-term follow-up of people with HBeAg seroconversion found that 12 out of 283 people experienced HBeAg positive seroreversion over a median of 8.6 years (Hsu 2002[35]). This is equal to an annual probability of 0.5% and a 95% confidence interval of 0.3% to 0.9%. The calculation of this can be found in section I.2.3.3.
10	HBeAg positive CHB to HBeAg negative CHB	5.0%	2.5% to 7.5%	This transition does not appear to have been included in the models by on Dakin 2010[16] or Wong 1995[86]. The GDG agreed that this value is not well described in the literature but is a plausible event in the natural history of the disease. This value was informed by a statement in Fattovich 2003[25] that 'HBeAg seroconversion associated with liver disease remission marks the transition from chronic hepatitis B to the inactive HBeAg carrier state. However, a small percentage of patients (approx. 5%) may continue to show biochemical activity and high levels of serum HBV DNA at the time of HBeAg seroconversion. These patients as well as those undergoing reactivation of hepatitis B after HBeAg seroconversion constitute the group of patients with HBeAg negative chronic hepatitis B.' A 5% point estimate and confidence interval of 2.5% to 7.5% was discussed and agreed by the GDG.
11	Active CHB to undetectable HBV DNA – positive	5.3%	2.7% to 8.8%	None of the patients in the placebo arm of studies included in the current clinical review experienced a decrease in HBV DNA to fewer than 300 copies/ml. In the absence of other evidence, the GDG agreed that this value should be equal to half that of transition from Active CHB to HBeAg seroconversion (transition 2) and equal to transition from Undetectable HBV DNA to HBeAg seroconverted (transition 12). The mean value and confidence interval were calculated by assigning a beta distribution to transition 2 and dividing this value in half using probabilistic simulation. Note that this value is less than that used by Dakin 2010[16] who reported that 7.2% (95% CI 1.6%,

Transition (Figure 9)	Parameter description	Mean probability	95% Confidence Interval	Source
				18.7%) of patients in the placebo arm of studies included in their review had undetectable HBV DNA at one year. This value appears to have been derived from a study by Schiff 2003[75] comparing lamivudine to placebo in people who did not respond to interferon treatment which was excluded from our review on the basis that it did not meet our population criteria. The GDG were in agreement that based on their clinical experience, this value was too high to apply to patients within the UK.
12	Undetectable HBV DNA to active CHB – positive	12.5%	0.0% to 28.7%	Based on Dakin 2010 where the probability of HBeAg positive patients regaining detectable HBV DNA was assumed to be the same as for HBeAg negative CHB. The mean probability and confidence interval were obtained from studies included in the NMA by Dakin 2010[16] and reflect the number of people in the placebo arm who still had undetectable HBV DNA at 2 years compared to week 48.
13	Active CHB to HCC – positive	0.5%	0.4% to 0.6%	Within the REVEAL trial[10] there were 153 cases of HCC over 31,625 patient years in people with HBV DNA >300 c/mL. This is equal to an annual probability of 0.5% and a 95% confidence interval of 0.4% to 0.6%. This is the same value used in the analyses by Dakin 2010[16] and Wong 1995[86].
14	Active CHB to compensated cirrhosis positive	5.3%	2.3% to 11.8%	As reported in a review by Fattovich 2003[25], the incidence of cirrhosis in people with predominantly HBeAg positive CHB ranges from 2 to 5.4 per 100 person years with a cumulative incidence of 8% to 20% over a five year period. As in the study by Dakin 2010[16], the upper limit of this estimate was used to inform this value. This is equal to an annual probability of 5.3% and a 95% confidence interval of 2.3% to 11.8%. This estimate is slightly greater than the one used by Wong 2011[85] (mean 4.4%, 95% CI 2.2% to 8.8%) informed by Liaw 1987[54], and Veenstra 2007[83]. The GDG agreed that the value from Dakin 2010 more closely matched their expectation of this transition in a UK population.
15	HBeAg seroconverted to HBsAg seroconversion - positive	0.7%	0.3% to 1.3%	The value used to inform this transition was obtained from Dakin 2010[16] and Wong 1995[86]. The GDG agreed that the value for this variable should be equal to that for people moving from HBeAg

Transition (Figure 9)	Parameter description	Mean probability	95% Confidence Interval	Source
				negative undetectable HBV DNA to HBsAg seroconversion (transition 25).
16	HBeAg seroconverted to HBeAg negative CHB	2.8%	2.2% to 3.5%	A long-term follow-up of people with HBeAg seroconversion found that 68 out of 283 people experienced HBeAg negative sero*reversion* over a median of 8.6[35]. This is equal to an annual probability of 2.8% according to methods described by Fleurence and Hollenbeak 2007[27]. An example of how this is calculated can be found in section I.2.3.3. The confidence interval was calculated according to the delta method described by Kirkwood and Stearne 2003[40]. This value is lower than that reported by Papatheodoridis 2008[68], which is quoted by EASL 2012 and has narrower confidence intervals than the value used by Dakin 2010.
17	HBeAg seroconverted to HCC	0.2%	0.1% to 0.5%	In a long-term follow-up of people with HBeAg seroconversion, HCC was detected in 6 patients over a median of 8.6 years (Hsu 2002). This is equal to an annual probability of 0.2% according to methods described by Fleurence and Hollenbeak 2007[27]. The confidence interval was calculated according to the delta method described by Kirkwood and Stearne 2003[40]. This value is similar to the value reported in the REVEAL trial (0.3%; 95% CI 0.2% to 0.3%; Chen 2006) and was used in preference to the slightly higher estimate used in the analysis by Dakin 2010[16] and Wong 1995[86] (mean 0.5%, 95% CI 0.0% to 1.7%) as it is specific to those in the inactive carrier health state.
18	Undetectable HBV DNA to HBeAg seroconverted positive	5.3%	2.7% to 8.8%	In the absence of other evidence, the GDG agreed that this value should be equal to half that of transition from Active CHB to HBeAg seroconversion (transition 2) and equal to transition from active CHB to undetectable HBV DNA (transition 5). The mean value and confidence interval were calculated by assigning a beta distribution to transition 2 and dividing this value in half using probabilistic simulation¥. This in contrast to the assumption by Dakin 2010[16] that the probability of becoming an inactive carrier was the same for people with undetectable HVB DNA as for people with detectable levels of HBV DNA.
19	Undetectable HBV DNA to HBsAg	1.8%	0.0% to 2.3%	The mean probability and range used to inform this transition

Transition (Figure 9)	Parameter description	Mean probability	95% Confidence Interval	Source
	seroconversion positive			probability was based on the assumption by Dakin 2010[16] that because patients participating in trials of Adefovir had similar rates of HBeAg seroconversion as untreated patients, people with undetectable HBV DNA had the same probability of HBeAg seroconversion as those with detectable HBV DNA.
20	Undetectable HBV DNA to HCC - positive	0.1%	0.0% to 0.2%	Within the REVEAL trial[10], there were 11 cases of HCC over 10, 154 patient years in people with HBV DNA <300 c/ml. This is equal to an annual probability of 0.1% according to methods described by Fleurence[27] and Hollenbeak 2007. The confidence interval was calculated according to the delta method described by Kirkwood and Sterne 2003.
21	Undetectable HBV DNA to compensated cirrhosis - positive	1.6%	0.5% to 3.4%	Dakin 2010 reported that within the REVEAL trial [10], the relative risk of cirrhosis in people with undetectable HBV DNA compared with detectable HBV DNA was 0.308 (95% CI 0.231 to 0.385). This risk was multiplied by the annual rate calculated for people with detectable HBV DNA (transition 8).
22	Compensated cirrhosis to HCC	2.3%	1.0% to 4.4%	Among people with CHB and cirrhosis, the annual probability of developing HCC ranges from 0.2% to 7.8% [86]). The REVEAL study trial [10] found that compared to people with HBV DNA of less than 300c/ml, the hazard ratio (HR) of developing HCC was 21.8 (95% CI 14.9 to 32.0) for people with liver cirrhosis. This transition probability was calculated by multiplying this HR by the annual rate of HCC from Undetectable HBV DNA (transition 14). The resulting value is similar to the value used by Dakin 2010[16] and Wong 1995[86] (mean 2.4%, 95% CI 0.0% to 8.0%). According to the systematic review and meta-analysis by Singal 2011[77], the probability of developing HCC is the same for people with HBV DNA positive compensated cirrhosis (CC) as for those with HBV DNA negative CC. This is the same assumption made by Dakin 2010.
23	Compensated cirrhosis to decompensated cirrhosis (no treatment)	5.0%	2.3% to 9.5%	Wong 1995 report that the annual probability that people with cirrhosis will experience hepatic decompensation ranges from 3.8% to 9.5%. The value used to inform this transition probability was obtained from Dakin 2010 based on studies by Crowley 2002[13], Crowley 2000[14], Lavanchy 2004[48], and Liaw 1987[54]. This

Transition (Figure 9)	Parameter description	Mean probability	95% Confidence Interval	Source
				value is similar to that used by Wong 1995[86] of 5.9% and attributed to a study by Fattovich 1995[26]. According to this study, neither the presence of HBV DNA nor HBeAg predicted the development of decompensation. Therefore, the same probability was applied to people with HBV DNA negative CC and HBeAg negative CHB.
24	Decompensated cirrhosis to compensated cirrhosis (no treatment)	0.0%	0.0% to 0.0%	This value was based on the assumption by Dakin 2010[16] that this transition was not permitted as none of the reviewed literature reported patients who had recovered from DC without treatment.
25	Decompensated cirrhosis to HCC	2.9%	1.0% to 6.3%	A recent systematic review of the incidence of HCC in CHB found that in 12 studies HCC was diagnosed in 78 of 779 people with compensated and 18 of 148 people with decompensated cirrhosis. The resulting odds ratio (OR 1.24, 95% CI 0.72 to 2.15) was multiplied by the probability of HCC from CC (transition 16) using probabilistic simulation[¥]. Note that this calculation is in contrast to finding by Singal[77] (2011) and the assumption by Dakin 2010[16] and Wong 1995[86] that people with decompensated cirrhosis (DC) have the same probability of developing HCC as people with CC.
26	Decompensated cirrhosis to liver transplant	1.6%	0.0% to 20.0%	According to Dakin 2010[16], data from the UK National Transplant Database (UK Transplant 2002)[65] suggests that approximately 25 liver transplants are conducted in the UK every year for CHB. If it is assumed that liver transplantation is only conducted on patients with CHB if they have HCC or DC, then 1.4% of people with CHB would be indicated for transplantation, based on the London clinical audit. If the total prevalence of CHB in the UK is 0.3%[9] and 65% of people with CHB are diagnosed, there are around 115, 500 people in the UK with diagnosed CHB, of whom around 1600 (1.4%) would have HCC or DC and be indicated for transplant. This suggests that the chance of any one patient with DC of HCC undergoing liver transplant in any given year is 1.55%. Minimum assumes no liver transplants are conducted for DC. Maximum is expert opinion.
27	HCC to liver transplant	1.6%	0.0% to 3.1%	This figure was based on the assumption by Dakin 2010 that the

Transition (Figure 9)	Parameter description	Mean probability	95% Confidence Interval	Source
				risk of liver transplant from HCC is equal to that from DC; the minimum value assumes that no liver transplants are conducted for HCC and the maximum was assumed to be twice the mean value.
28	HBeAg negative/HBV DNA positive to HBsAg seroconversion	0.4%	0.2% to 0.9%	A review by Fattovich 2003[24] states that delayed spontaneous HBsAg clearance occurs at a rate of 0.5% per year and cites studies by Papatheodoridis 2001[68] and Hsu 2002. This rate seems to be that reported by Hsu 2002[35] as the data reported by Papatheodoridis 2005[69] (5 out of 195 untreated patients achieved HBsAg clearance over a mean of 6.1 years) and is equivalent to an annual rate of 0.4%. Combined, the two studies report a total of 8 HBeAg negative people experiencing HBsAg seroconversion over 1802 patient years. This is equal to an annual probability of 0.4% and a 95% confidence interval of 0.2% to 0.9%.
29	HBeAg negative/HBV DNA positive to HBeAg negative with undetectable HBV DNA	4.8%	1.2% to 17.9%	Papatheodoridis 2008A[68] followed 65 people with HBeAg negative CHB to observe longitudinal changes in HBV DNA. They found that over a median of 7.5 months, 3 people had HBV DNA levels of less than 2000 IU/ml, or approximately 380 copies/ml. It was assumed that this was a slight overestimate due to the higher threshold used, and that 2 patients would have experienced HBV DNA of less than 300 copies/ml over this period. This is equal to an annual probability of 4.8% according to methods described by Fleurence and Hollenbeak 2007[27]. The confidence interval was calculated according to the delta method described by Kirkwood and Sterne 2003[40].
30	HBeAg negative with undetectable HBV DNA to HBeAg negative with detectable HBV DNA	12.5%	0.0% to 28.7%	The mean probability and confidence interval was obtained from studies included in the NMA by Dakin 2010[16] and reflect the number of people in the placebo arm who still had undetectable HBV DNA at 2 years compared to week 48.
31	HBeAg negative with undetectable HBV DNA to HBsAg seroconversion	0.7%	0.3% to 1.3%	In the absence of other data, the GDG indicated that the transition probability for this variable was likely to be similar for that for HBeAg positive inactive carrier to HBsAg seroconversion (transition 9).
32	HBeAg negative/HBV DNA positive to HBV DNA positive CC	9.0%	2.3% to 20.0%	A review of the natural history of CHB states that progression to cirrhosis occurs at an annual rate of 8-10% in HBeAg negative

Transition (Figure 9)	Parameter description	Mean probability	95% Confidence Interval	Source
				patients (de Franchis 1993[17]). Dakin 2010 chose to use the intermediate value as the mean value and assumed that the minimum value represented the minimum risk of HCC in people with HBeAg positive CHB and the maximum value was assumed to be twice the upper limit reported by de Franchis 1993[17]. In the absence of more informative data, the same assumptions and values were used to inform this value in the current analysis.
33	HBeAg negative active CHB to HCC	0.5%	0.2% to 1.5%	The study by Hsu 2002 found that over a median follow-up of 9 years, 3 out of 68 people with HBeAg negative CHB progressed to HCC. This is equal to an annual transition probability of 0.5% with a 95% CI of 0.2% to 1.5%.
34	Undetectable HBV DNA to compensated cirrhosis	0.5%	0.0% to 1.3%	This value was taken from the analysis by Dakin 2010[16], who assumed that that the probability of progressing to CC from HBeAg negative undetectable HBV DNA was the same as reported for people who are HBeAg positive HBeAg seroconverted (represented in this model as Transition 3).
35	HBeAg negative undetectable CHB to HCC	0.5%	0.2% to 1.5%	As in the evaluation by Shepherd 2006[76] and Dakin 2010[16], it was assumed that the probability of developing HCC from HBeAg negative CHB with undetectable HBV DNA was the same as for people with HBeAg negative CHB with detectable HBV DNA. Please refer to transition 27 for the calculations and data sources used to inform this value.
36	HBeAg negative compensated cirrhosis to HCC	2.3%	1.0% to 4.4%	Both Wong 1995[86] and Dakin 2010[16] have used the finding by Fattovich 1995[26] that the risk of developing HCC from a cirrhotic health state is not affected by HBeAg status to justify assuming that this transition probability is equal to the transition from CC to HCC (transition 16).
37	HBeAg negative compensated cirrhosis to DC (no treatment)	5.0%	2.3% to 9.5%	According to a study by Fattovich 1995[26] and assumptions made by Wong 1995[86] and Dakin 2010[16], neither the presence of HBV DNA nor HBeAg predicted the development of DC; therefore, the same probability was applied to people with HBV DNA negative CC and HBeAg negative CHB (transition 17).
38	HBeAg negative DC to compensated cirrhosis (no treatment)	0.0%	0.0% to 0.0%	This value was based on the assumption by Dakin 2010 [16]that because no studies were identified which reported patients who had recovered from DC without treatment, this transition was not

Transition (Figure 9)	Parameter description	Mean probability	95% Confidence Interval	Source
				permitted.
39	HBeAg negative DC to HCC	2.9%	1.0% to 6.3%	As in Dakin 2010[16], it was assumed that the same probability of transition to HCC from DC occurs in people with HBeAg negative CHB as in HBeAg positive (transition 19).
40	HBeAg negative DC to Liver Transplant	1.6%	0.0% to 20.0%	In the absence of other data, the same values were used as for people with HBeAg positive CHB (transition 20).
41	HBeAg negative HCC to Liver Transplant	1.6%	0.0% to 3.1%	It was assumed that the same probability of transition from HCC to Liver Transplant applies to people with HBeAg negative CHb as HBeAg positive CHB (transition 21)

Table 36: On treatment probability (replaces natural history probabilities for all patients on treatment)

Transition (Figure 9)	Parameter description	Mean probability	95% Confidence Interval	Source
17 & 31	Compensated cirrhosis to decompensated cirrhosis	1.4%	0.8% to 2.0%	This value was informed by the analysis by Dakin 2010[16], who calculated this probability based on a pooled analysis of 3 studies of cirrhotic patients receiving lamivudine and/or adefovir (Oo 2012 [66], Lampertico 2006[45], Liaw 2004[53].
18 & 32	Decompensated cirrhosis to compensated cirrhosis (first year only; subsequent years = 0%)	13.6%	10.5% to 16.6%	This value was informed by the analysis by Dakin 2010[16], who reported that the study by Schiff 2003[75] found that 21 of 128 patients with decompensated cirrhosis receiving LAM + ADF no longer needed liver transplantation and contradictory findings by Oo 2012[66] that no patients improved from Child Pugh B/C to A. The probability reported by Dakin 2010[16] was based on a weighted average rate from these two studies.

I.2.3.4 Life expectancy

All individuals in the model were exposed to a background rate of mortality for people with CHB. The age- and sex- specific all-cause mortality rates from the most recent available life tables for England and Wales (ONS 2010) were identified. The age-, sex- alcohol-, and smoking- adjusted hazard ratio for all-cause mortality in HBsAg positive individuals compared with HBsAg negative people from the REVEAL trial (mean 1.1, 95% CI 0.9 to 1.3).[37] were then multiplied by the mortality rates to give an adjusted mortality rate that could be applied within the model.

According to the clinical literature, there is a disease-specific excess mortality rate (i.e. a risk of mortality in excess of the baseline risk of all-cause mortality) associated with certain health states in addition to the background mortality rate. The states to which this applies are depicted in Figure 10. The values and sources used to calculate each of these probabilities are described in Table 4.

Excess mortality among people who have undergone HBsAg and HBeAg seroconversion is extremely rare, with approximately 0.01 and 0.03 liver-related deaths reported per 100 patient years, respectively. Therefore, in the model these patients did not experience a risk of death in excess of the background rate of mortality.

Figure 10: Excess mortality

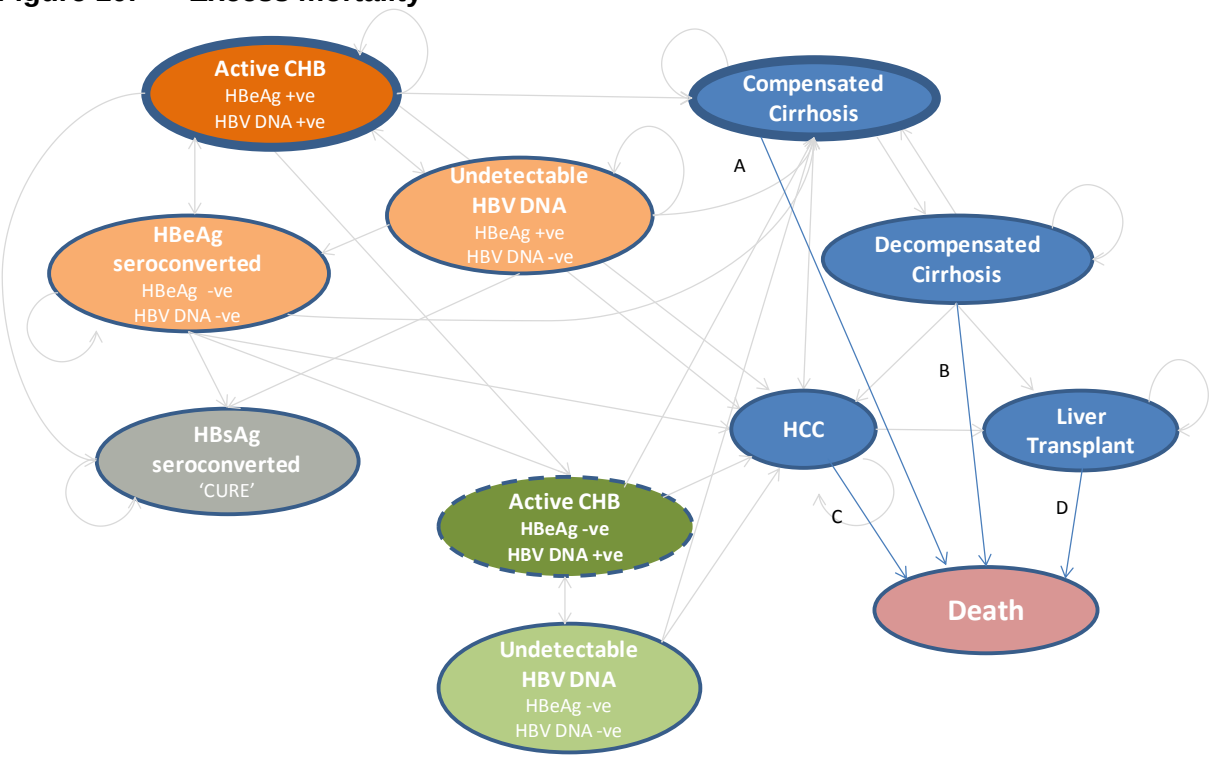

Table 37: Disease-specific excess mortality associated with certain health states

Transition (Figure 10)	Health state	Mean value	Range	Source
A	CC	3.7%	3.0% to 4.4%	The five year mortality rate in people with CHB and compensated cirrhosis reported to range from 14% to 20%[24]. This is equivalent to an annual probability of 3.0% to 4.4%. The mean value was calculated based on this reported range.
B	DC	15.6%	11.9% to 20.3%	The five year mortality rate in people with decompensated cirrhosis was reported to

Transition (Figure 10)	Health state	Mean value	Range	Source
				be 85%[24]. This is equivalent to an annual probability of 15.6% and a 95% CI of 11.9% to 20.3%.
C	HCC	56%	43% to 99%	The mean value was informed by a report from the Surveillance, Epidemiology and End Results (SEER) Program. The 5 year relative survival for persons with liver cancer is 5% to 6%, yielding a disease-specific excess mortality of 56% per year on top of the baseline mortality. Dakin 2010[16] used these sources to find the range: (Wong 1995[86], Crowley 2002[13],Crowley 2000[14], Lavanchy 2004[48].
D	LT (first year) (subsequent years)	21.0% 5.7%	6.0% to 42.0% 2.0% to 11.0%	Mortality during the first and subsequent years following liver transplantation was based on a study by Veenstra 2007[83]. These values were similar to those used in models by Kanwal 2006[39] (first year mean 18.8% and subsequent years 5.4%) and Wong 2011[88] (first year NR and subsequent years 6.7%).

I.2.3.5 Relative treatment effects (at one year)

Transition probabilities for the key transitions that differ between treatments (the probability of achieving undetectable HBV DNA or HBeAg seroconversion) were based on the network meta-analysis conducted for the systematic clinical review (described in full in Appendix X). In order to incorporate the treatment effects into the model, the relative risks were used. These relative risks are based on the same data as the odds ratios but are not reported in the NMA chapter. They are reported however in the following tables (Table 38, Table 39, Table 40, Table 41 and Table 42). The data extracted from the NMA provides relative risks of all drugs (NAs and IFNs) compared with Lamivudine. In the case of pegIFN and pegIFN with Lamivudine, the 26 week follow up relative risks were used as this is this was assessed by the GDG as the most appropriate measurement of the true effectiveness of pegIFN. In order to consider all the treatments compared to placebo, an indirect comparison was used where treatments were compared through Lamivudine. This required multiplying the relative risk of each treatment with the relative risk of Lamivudine compared with placebo as in the equation below:

where

RR_{xP} is the RR of treatment X compared to placebo
RR_{xLam} is the RR of treatment X compared to Lamivudine and
RR_{LamP} is the RR of Lamivudine compared to placebo
In the Lamivudine resistant populations however, the treatments are simply compared directly with placebo, in this case the relative risks are just applied directly.
The relative risks and also the costs and outcomes are applied annually in all treatments apart from Peg IFN and Peg IFN with Lamivudine because it is assumed that after a 48-week cycle, patients will either have seroconverted, have undetectable HBV DNA or will be switched from peg IFN to a nucleoside treatment.
The effectiveness of each drug associated with the outcomes in various populations is presented below:

Table 38: HBeAg seroconversion at 48 week in HBeAg positive CHB (Nucleoside naïve)

Intervention	Relative Risk versus Placebo (RR_{xP})	Relative risk versus Lamivudine (RR_{xLam})	Standard Deviation (SD)
Peg-INF alfa 2a	3.718	1.583	0.270
Peg-INF alfa 2a + Lamivudine	3.123	1.330	0.240
Lamivudine	2.348	1	0.159
Tenofovir	2.703	1.151	0.443
Entecavir	2.432	1.035	0.115

Table 39: HBeAg seroconversion at 48 week in HBeAg positive CHB (Lamivudine Resistant)

Intervention	Relative Risk versus Placebo	Standard Deviation
Tenofovir	7.232	5.925
Entecavir	2.104	7.195

Table 40: Undetectable DNA in HBeAg positive CHB (Nucleoside naïve)

Intervention	Relative Risk versus Placebo	Relative risk versus Lamivudine	Standard Deviation
Peg-INF alfa 2a	84.719	3.31	1.643
Peg-INF alfa 2a + Lamivudine	79.089	3.09	1.546
Lamivudine	25.595	1	0.034
Tenofovir	61.018	2.384	0.177
Entecavir	42.846	1.674	0.200

Table 41: Undetectable DNA in HBeAg negative CHB (Nucleoside naïve)

Intervention	Relative Risk versus Placebo	Relative risk versus Lamivudine	Standard Deviation
Peg-INF alfa 2a	29.45	2.91	1.444
Peg-INF alfa 2a + Lamivudine	30.97	3.06	1.505
Lamivudine	10.12	1	0.103
Tenofovir	13.85	1.368	0.164
Entecavir	13.63	1.346	0.344

Table 42: Undetectable DNA in HBeAg positive CHB (Lamivudine Resistant)

Intervention	Relative Risk versus Placebo	Standard Deviation
Tenofovir	39.17	8.662
Entecavir	12.05	6.107

The effectiveness of the interventions for the treatment of cirrhosis is evaluated elsewhere (Appendix H for the decompensated cirrhosis model). In order that this other model is included in the sequencing model, the most effective treatment that has been recommended has been used. There is potential for biasing in favour of less effective treatments here

because this is where the more severe outcomes are and they have a more effective treatment once they reach this stage. In order to capture the effects of a combined treatment, in every probabilistic simulation, the most effective treatment is chosen and used in the model.

I.2.3.6 Resistance

Primary drug resistance mutations refer to amino acid changes that result in reduced susceptibility to an antiviral agent. Several evolutionary pathways of drug resistant HBV have been observed in patients treated with NAs and it is possible that the mutations selected with one drug may affect the efficacy of other NAs. For example, lamivudine resistance mutations confer cross-resistance to entecavir and other members of the nucleoside structural group such as emtricitabine, but not adefovir or tenofovir; and resistance to adefovir confers partial cross-resistance to tenofovir.[92]

Recently, Locarnini 2008[55] and Zoulim 2009[91] published summaries of the cumulative annual resistance rates for each antiviral drug in several populations, however this data was not inclusive of all populations or for all drugs. The information contained within these papers was used as a starting point and data to inform all remaining resistance rates for each population over five years was identified through ad hoc literature searches. The results of these searches are summarised in **Table 16** and Table 17. To the best of our knowledge, this represents the most comprehensive review of long-term antiviral resistance rates in the literature.

As in previous published economic evaluations Dakin 2010[16], resistance rates were assumed to vary over the first five years of treatment with any given therapy and remain constant during all subsequent years. Once patients develop resistance to their first drug they switch to second line therapy. In the model, developing resistance to a second treatment is independent of the fact that the patient has already developed resistance to the first. As reported by Shepherd 2006[76], this is in accordance with clinical evidence on lamivudine, the only antiviral in the analysis for which resistance has been shown to develop.

Table 43: HBeAg positive CHB - Cumulative resistance rates associated with antiviral therapy

Antiviral	Year 1	Year 2	Year 3	Year 4	Year 5	Source
Treatment naïve						
Lamivudine	24.0%	42.0%	53.0%	70.0%	80.0%	Lai 2003[44] pooled data from four multicentre phase 3 trials to yield a study population of 967 HBeAg positive treatment naïve patients on lamivudine therapy. The incidence of YMDD variants was estimated for every year of therapy over 5 years[44] & Leung 2001[49].
Entecavir	0.2%	0.3%	1.2%	NA	NA	Tenney 2009[80] reported the results of six phase II and III studies of entecavir therapy in both treatment naïve and lamivudine resistant patients treated for up to 5 years. Patients included in these studies were predominantly HBeAg positive.
Tenofovir	0.0%	0.0%	0.0%	NA	NA	Marcellin 2008[60] reported the results of two phase III trials of tenofovir in HBeAg positive and negative treatment naïve patients. At one year, there was no decreased sensitivity to tenofovir in either group. The three year results of two phase III open label trials of tenofovir in both HbeAg positive and negative patients are reported in Heathcote 2011[34]. Resistance surveillance results are not separated by HBeAg status, but report that of 29 patients included in resistance testing, three had a conserved site change but none had decreased phenotypic sensitivity to tenofovir (Heathcote 2011; Snow-Lampart 2011[78]), or at 4 years[79]). After year 5 of a phase III trial, Marcellin 2011[61] reported that none of the patients had detectable resistance to tenofovir.
Lamivudine-resistant						
Entecavir*	6.0%	15.0%	36.0%	47.0%	51.0%	Tenney 2009[80] reported the results of six phase II and III studies of entecavir therapy in both treatment naïve and lamivudine resistant patients treated for up to 5 years. Patients included in these studies were predominantly HBeAg positive[11,71]
Tenofovir	0.0%	0.0%	0.0%	NA	NA	Patterson 2011[70] reported the results of an open label trial of tenofovir in lamivudine and adefovir resistant patients. At two years, none of the patients developed novel mutations conferring resistance[70]. Van Brommel 2010[82] report the probability of treatment response to tenofovir based on previous NA resistance, but don't provide information about the development of resistance. In a case study of 9 lamivudine resistant HBeAg positive patients, Lok 2007[57] found that over three years none developed resistance to tenofovir.

NR = not reported/identified in the published literature

Table 44: HBeAg negative CHB - Cumulative resistance rates associated with antiviral therapy

Drug	Year 1	Year 2	Year 3	Year 4	Year 5	Source
Treatment naïve						
Lamivudine	6.3%	50%	70%	70%	NA	In a phase 3 trial conducted by Lai 2006[43], 20 of 313 HBeAg negative treatment naïve patients had lamivudine resistant mutations at week 48. After two years, the incidence of YMDD variants in HBeAg negative patients is present in approximately 50% of patients according to studies by Rizzetto 2005[74] and Hadziyannis 2000[31], and 70% after 3 years of treatment according to Rapti 2007.[72]
Entecavir	0.0%	0.0%	1.2%	NA	NA	According to a study by Lai 2006[43], no evidence of resistance to entecavir has been observed in HBeAg negative treatment naïve patients at 1 year. Similarly, a cohort study of treatment naïve CHB patients (60% HBeAg negative) found that the cumulative rates of development of entecavir resistance were 0%, 0% and 1.2% (1 out of 222 patients) for the first three years (Yuen 2011). Resistance at four and five years was not identified in the literature.
Tenofovir	0.0%	0.0%	0.0%	NA	NA	Marcellin 2008[60] reported the results of two phase 3 trials of tenofovir in HBeAg positive and negative treatment naïve patients. At one year, there was no decreased sensitivity to tenofovir in either group (out of 250 HBeAg negative patients). The same result was reported by Berg 2010.[3]The three year results of two phase III open label trials of tenofovir in both HbeAg positive and negative patients are reported in Heathcote 2011[34]. Although resistance surveillance results are not separated by HBeAg status, but report that of 29 patients included in resistance testing, three had a conserved site change but none had decreased phenotypic sensitivity to tenofovir[34]. Resistance at two, four and five years was not identified in the literature.
Lamivudine-resistant						
Entecavir	0.0%	9.0%	44.8%	44.8%	0.0%	Entecavir resistance have been reported to develop in 9% of LAM resistant patients within 24 months of therapy.[72] A study by Mukaide 2010[62] found that over a 3 year course of treatment, entecavir resistance was detected in 44.8% of patients who were refractory to lamivudine during the preceding treatment period. No resistance data for entecavir in HBeAg negative lamivudine resistant patients was identified at one, four or five years.
Tenofovir	0.0%	0.0%	0.0%	NA	NA	No resistance reported in TDF, same as above.

I.2.3.7 Durability of HBeAg seroconversion and/or undetectable HBV DNA

The GDG were aware that induction of HBeAg seroconversion by antiviral therapy is temporary in most patients with chronic HBV.[73] However, studies have reported contradictory results and the long term durability of HBeAg seroconversion remains an area of considerable uncertainty.

Because this information was not available from the clinical review conducted for this guideline, the literature was searched for longitudinal studies evaluating post-treatment durability of serologic and virologic response to each antiviral therapy. In the absence of any comparative long-term treatment studies, the GDG decided to use estimates of treatment durability reported in the most recent American[57] and European guidelines on Hepatitis B. According to these sources, it appears that HBeAg seroconversion is less durable after discontinuation of NA compared to Peg-INF therapy in HBeAg positive patients. The opposite appears to be true in HBeAg negative patients with respect to viral suppression. The information contained within these guidelines is summarised in Table 45 and Table 46. Where a range was reported, the mean value was used to inform the point estimate. Where a mean value was reported, a range of 10% was assumed.

Table 45: HBeAg positive CHB – Annual rates of HBeAg seroreversion

Antiviral drug	Relapse		Source
	Mean	Range	
Peg-IFN α2a	3%	2% to 4%	As reported in the AASLD,[57] 'Peg-IFN α2a induced HBeAg clearance has been reported to be durable in 80% to 90% of patients after a follow-up period of 4 to 8 years. Fattovich 1995[26], Lau 1997[46], Lok 1990[56], Korenman 1991[41], Krogsgaard 1998[42], Carreno 1999[6])' It was assumed that 5 year durability of treatment was between 80% and 90%. This is equivalent to an annual probability of 3.2% (2.1% to 4.4%).
Tenofovir & Adefovir	25%	20% to 30%	As reported in the AASLD,[57] 'the durability of HBeAg seroconversion was examined in 76 patients who had received a median of 80 weeks of adefovir treatment and had been followed for a median of 52 weeks off-treatment. HBeAg seroconversion was maintained in 92% (69/76) of patients. The high rate of durability may be related to the long duration of treatment. (Chang 2004[8]). No durability info reported on Tenofovir.' Because people in this trial of adefovir treatment were treated long-term, it was assumed that the relapse rates were less than those reported, with durability of treatment at 70% to 80%.
Lamivudine & Entecavir	20%	15% to 25%	As reported in the AASLD,[57] 'a follow-up study in non-Asian countries found that 77% of patients with HBeAg seroconversion following lamivudine therapy had durable response after a median follow-up of 37 months. (Dienstag 2003[21]) Among HBeAg positive patients who underwent HBeAg seroconversion and stopped entecavir treatment at week 48, approximately 70% remained HBeAg negative (Chang 2006[7], Gish 2005[30]).

Table 46: HBeAg negative CHB – Annual rates of viral re-activation

Antiviral drug	Relapse		Source
	Mean	Range	
Peg-IFN α2a	95%	90% to	As reported by the EASL guidelines[23], 'rates of sustained off-

Antiviral	Relapse		Source
		100%	treatment response in people with HBeAg negative hepatitis B were 20% at 6 months following 12 months of Peg-IFN α2a therapy and <5% following discontinuation of NA therapy. (90-92, 94, 95)'
Tenofovir & Adefovir	92%	87% to 97%	As reported in the AASLD,[57] 'among HBeAg negative patients, viral suppression was sustained in only 8% of patients who stopped adefovir after 1 year of treatment. (200) No durability info reported on Tenofovir.'
Lamivudine & Entecavir	90%	85% to 95%	As reported in the AASLD,[57] 'data on the durability of response following entecavir treatment among HBeAg negative patients are lacking but it is likely that the vast majority of patients will relapse if treatment is stopped after one year. Among HBeAg negative patients, the durability of viral suppression after one year of lamivudine treatment is less than 10%.

I.2.3.8 Withdrawal due to adverse events

Previous published economic evaluations have assumed that adverse events associated with nucleos(t)ides have no effect on costs, mortality or quality of life, aside from the cost of renal monitoring which was included in the analysis by Dakin 2010.
However, a systematic review by the National Institute for Health[84] found that adverse events during antiviral therapy were reported for more than 50% of patients. The review found that although withdrawal rates and frequency and severity of adverse events after nucleos(t)ide therapy was generally similar to placebo, interferon-based therapy was not as well tolerated as oral antiviral drugs. Moreover, the GDG indicated that the resource use associated with adverse events was likely to differ between interferon and the nucleos(t)ides and between different classes of nucleos(t)ide.

Pegylated-Interferon alfa 2a

Standard INF-a and pegINF a are reported to have similar side effects profiles, with the most common being an influenza-like illness (fever, chills, headache, malaise, myalgia, etc.). Other side effects include fatigue, anorexia, weight loss, and mild increase in hair loss. The side effect that the GDG indicted most often merits treatment is emotional liability: anxiety, irritability, depression and thoughts.

Nucleoside analogues: Lamivudine & Entecavir

In generally, lamivudine is very well tolerated and entecavir is reported to have a similar side effect profile to lamivudine (Chang 2006, Lai 2006). The most frequent adverse events include headache, upper respiratory tract infection, nasopharagitis, upper abdominal pain, fatigue, and pyrexia, all of which occur at the same frequency as those on placebo (Lok 2007[58]).
Although studies in rodents have found an increased incidence of lung adenomas, brain gliomas and HCCs (NDA briefing document; reported in Lok 2007 [58]), to date no difference in rates of HCC have been found between patients receiving entecavir compared to lamivudine (Lok 2007 [58]).

Nucleotide analogues: Adefovir & Tenofovir

Nephrotoxicity has been reported in 3% of patients with compensated liver disease after 4-5 years of continued adefovir therapy, and in 12% of transplant recipients and 28% of patients with decompensated cirrhosis during the first year of therapy (Hazdziyannis 2005[32], Schiff 2003[75]; reported in Lok 2007[57]).
There are concerns about the potential nephrotoxicity of long-term tenofovir therapy, with cases of Fanconi-like syndrome, nephrogenic diabetes insipidus and acute renal failure

being reported in people with HIV. Although severe nephrotoxicity has not been reported in people with Hepatitis B, there are few people who have been treated for longer than 2 years. Recently, cases of reduced bone density and osteomalacia have been reported in patients with HIV receiving long-term tenofovir therapy. This reduction was not associated with symptoms. The GDG differed in their practice of offering regular bone density measurement for patients on tenofovir treatment and decided that the cost of conducting annual scans should be incorporated into the model as a sensitivity analysis.

Antiviral therapy	Withdrawal due to drug-related adverse events		
	Point estimate	Range	Source
Peg-IFN α2a	5%	3% to 6%	Lower and upper range obtained from Cooksley 2003[12] and Lau 2005[47], which were cited in a systematic review of treatment for hepatitis B by Hui 2005[36]. The point estimate assumes a normal distribution.
Lamivudine	5%	3% to 7%	Gish 2007[29], Ahn 2009[1]
Entecavir	1.5%	1% to 2%	Gish 2007[29], Ahn 2009[1]
Tenofovir	3%		Marcellin 2011 [61]

I.2.3.9 Utilities

Utility data was obtained from a Canadian study of over 400 patients in different stages of CHB. [89] The utilities were based on the Health Utilities Index Mark 3 scores and closely matched the health states used within our model.
It was assumed that patients who spontaneously clear HBV infection had utilities similar to the general adult population.

Table 47: Utilities used in the model

Health state	Mean value	Value range
Non-cirrhotic CHB	0.87	0.85 to 0.88
Compensated cirrhosis	0.81	0.75 to 0.86
Decompensated cirrhosis	0.49	0.22 to 0.75
Hepatocellular carcinoma	0.85	0.76 to 0.95
Post-liver transplant	0.72	0.60 to 0.83

Source: Woo 2012[89]

I.2.3.10 Resource use and costs

Anti-viral drug therapy

Drug costs were calculated based on prices quoted in the British National Formulary 63. [38] Optimal doses were obtained from the BNF, confirmed by the GDG, and checked against doses used in the trials included in the clinical review (Table 48).

Table 48: Unit costs of antiviral drug therapy

Drug	Dose	Net price per pack	Cost per annum
Peg INF α 2a (Pegasys)	135 µg (injection) 180 µg (injection)	£107.76 (prefilled syringe) £124.40 (prefilled syringe)	£5971 (cost of 48 week course)
Lamivudine (Zeffix)	100 mg (tablets)	£78.09 (28 tablets/pack)	£1,015
Adefovir (Hepsera)	10 mg (tablets)	£296.73 (30 tablets/pack)	£3,610
Entecavir (Baraclude)	0.5 mg (tablets)	£363.26 (30 tablets/pack)	£4,420

Drug	Dose	Net price per pack	Cost per annum
Entecavir (Baraclude)	1.0 mg (tablets)	£363.26 (30 tablets/pack)	£4,420
Tenofovir (Viread)	245 mg (tablets)	£240.46 (30 tablets/pack)	£2,925

*Source: BNF March 2012[38] *Calculated as a 48-week course of treatment*

Monitoring

The cost of managing patients in each health state was based on the GDG's recommendation about the frequency of monitoring for each group and their estimates of resource use required for each consultation. The unit costs associated with the laboratory tests, diagnostic tests and outpatient visits were based on 2011 NHS Reference Costs,[19], 2011 PSSRU data,[15] and expert opinion from the GDG.

The cost of monitoring associated with each treatment is reported in the tables from Table 49 to Table 54. For each drug or class of drug, patients were monitored for both toxicity and response to therapy. The costs were combined in the model.

Table 55 reports the cost of surveillance of patients with the active disease, which is independent from the treatment strategy.

Table 49: Monitoring for toxicity – Peg IFN α 2a

Item	Cost	Cost source
Time with nurse – Band 7 for 20 minutes	£47.33	PSSRU [a]
Full blood count	£2.49	Shepherd 2006 [76]
Liver function test	£4.12	Shepherd 2006[76]
ALT	£0.59	Expert opinion
Urea & electrolyte	£0.80	Expert opinion
Thyroid function test (at 12 weeks only)	£4.12	Shepherd 2006[76]
Total cost per monitoring consultation	**58.86**	
Frequency of monitoring consultations per year	6[b]	GDG Recommendation
Total per year (frequency * cost of monitoring)	**353.16**	

(a) Based on a unit cost of £142 per hour of patient contact for a Band 7 nurse including the cost of qualifications.
(b) Monitoring is assumed to occur at 0, 2, 4, 12, 24 and 32 weeks.

Table 50: Monitoring for response to therapy– Peg IFN α 2a

Item	Cost	Cost source
Time with specialist physician – Hepatologist for 20 minutes	£176	NHS Reference Costs,[19] [a]
HBeAg	£8.00	Expert opinion
HBV DNA	£40.00	Expert opinion
ALT	£0.59	Expert opinion
HBsAg quantitative	£5.00	Expert opinion
Total cost per monitoring consultation	**£230.00**	
Frequency of monitoring consultations per year	2 [b]	GDG Recommendation
Total per year (frequency * cost of monitoring)	£459.18	

(a) Based on the national average cost of a follow-up appointment with a consultant hepatologist.
(b) Monitoring is assumed to occur at 24 and 48 weeks.

Item	Cost
Total cost of monitoring pegIFN α 2a	**£812.34**

Table 51: Monitoring for toxicity – Entecavir and Lamivudine

Item	Cost	Cost source
Time with nurse – Band 7 for 20 minutes	£47.33	PSSRU [a]

Item	Cost	Cost source
Full blood count	£2.49	Shepherd 2006 [76]
Liver function test	£1.03	Expert opinion
Renal function test	£0.80	Expert opinion
Blood clotting	£3.80	Shepherd 2006
HBV DNA	£40.00	Expert opinion
HBsAg qualitative (except at 4 weeks)	£5.00	Expert opinion
Total cost per monitoring consultation	**£100.45**	
Frequency of monitoring consultations per year	4 [b]	GDG Recommendation
Total per year (frequency * cost of monitoring)	**£401.80**	

(a) Based on a unit cost of £142 per hour of patient contact for a Band 7 nurse including the cost of qualifications.
(b) Monitoring is assumed to occur at 0, 4,and 12 weeks and every 6 months afterwards.

Table 52: Monitoring for response to therapy – Entecavir and Lamivudine

Item	Cost	Cost source
Time with specialist physician – Hepatologist for 20 minutes	£176	NHS Reference Costs,[19s]
HBeAg	£8.00	Expert opinion
Hepatitis B DNA	£40.00	Expert opinion
ALT	£0.59	Expert opinion
HBsAg quantitative	£10.00	Expert opinion
Total cost per monitoring consultation	**£235.00**	
Frequency of monitoring consultations per year	2 [b]	GDG Recommendation
Total per year (frequency * cost of monitoring)	**£469.18**	

(a) Based on the national average cost of a follow-up appointment with a consultant hepatologist.
(b) Monitoring is assumed to occur at 24 and 48 weeks.

Item	Cost
Total cost of monitoring Entecavir and Lamivudine	**£870.98**

Table 53: Monitoring for toxicity – Tenofovir

Item	Cost	Cost source
Time with nurse – Band 7 for 20 minutes	£47.33	PSSRU [a]
Full blood count	£2.49	Shepherd 2006 [76]
Liver function test	£1.03	Expert opinion
Renal function test	£0.80	Expert opinion
Blood clotting	£3.80	Shepherd 2006[76]
Phosphate	£0.60	Expert opinion
Urine test for protein/creatine ratio	£0.58	Expert opinion
HBV DNA	£40.00	Expert opinion
HBsAg qualitative (except at 4 weeks)	£5.00	Expert opinion
Total cost per monitoring consultation	**£101.63**	
Frequency of monitoring consultations per year	4 [b]	GDG Recommendation
Total per year (frequency * cost of monitoring)	**£406.52**	

(a) Based on a unit cost of £142 per hour of patient contact for a Band 7 nurse including the cost of qualifications.
(b) Monitoring is assumed to occur at 0, 4,and 12 weeks and every 6 months afterwards.

Table 54: Monitoring for response to therapy –Tenofovir

Item	Cost	Cost source
Time with specialist physician – Hepatologist for 20 minutes	£176	NHS Reference Costs,[19] [a]
HBeAg	£8.00	Expert opinion
HBV DNA	£40.00	Expert opinion
ALT	£0.59	Expert opinion
HBsAg quantitative	£10.00	Expert opinion
Total cost per monitoring consultation	**£235.00**	
Frequency of monitoring consultations per year	2 [b]	GDG Recommendation
Total per year (frequency * cost of monitoring)	**£469.18**	

(a) Based on the national average cost of a follow-up appointment with a consultant hepatologist.
(b) Monitoring is assumed to occur at 24 and 48 weeks.

Item	Cost
Total cost of monitoring Tenofovir	**£865.70**

When a patient is receiving both drugs as a second line treatment, the cost of monitoring with the more expensive method will be applied to account for the maximum number of tests that will be done. We opted for this method instead of simply adding the monitoring cost of the two treatments together as this would lead to double counting since many of the costs would be the same for both.

Table 55: Monitoring patients who are active carriers at 24 and 48 weeks

Item	Cost	
Time with nurse – Band 7 for 20 minutes	£47.33	PSSRU [a]
HBV DNA	£40.00	Expert opinion
ALT	£0.59	Expert opinion
HBeAg antibody	£8.00	Expert opinion
Total cost per monitoring consultation	**£95.92**	
Frequency of monitoring consultations per year	2 [b]	GDG Recommendation
Total per year (frequency * cost of monitoring)	**£191.84**	

(a) Based on a unit cost of £142 per hour of patient contact for a Band 7 nurse including the cost of qualifications.
(b) Monitoring is assumed to occur at 24 and 48 weeks.

Progressive liver disease

The cost associated with managing different stages of progressive liver disease were obtained from a paper by Brown 2004[4], which identified the average cost associated with different stages of CHB-specific liver disease from a healthcare payer perspective in France, Italy, Spain and the UK. The authors estimated resource use associated with each health state using a Delphi panel approach. Specialist physicians (gastroenterologists, internal medicine physicians with specialty in hepatology, infectious disease specialists) experienced in managing people with CHB were asked to complete a questionnaire to obtain estimates of resources in the usual management of patients already identified as having CHB. The questionnaire asked about the use of antiviral drugs and other medications, physician visits, laboratory tests to monitor disease progression, procedures and hospital admissions over a year according to a set of pre-specified disease states (compensated cirrhosis, decompensated cirrhosis, hepatocellular carcinoma). Laboratory tests included those for blood biochemistry (analysis of alanine aminotransferase, aspartate aminotransferase,

alkaline phosphate, and bilirubin levels), serology (levels of antibodies to hepatitis B surface, core, and e antigens), viral load, blood cell counts, and clotting time, as well as other general tests such as urinalysis.
Brown et al[4] derived unit costs from published sources in England and Wales: hospital costs were obtained from the NHS database of the Chartered Institute of Public Finance and Accountancy; physician costs were derived from the PSSRU; procedure costs were averaged from those obtained from individual hospitals and 2001 NHS Reference Costs,[19]; laboratory test costs from the Unit Cost Database; and drug costs from the 2002 BNF. Costs associated with the year following liver transplant and each subsequent year were obtained from a report of the Department of Health (Economic evaluation of the liver transplant program in England and Wales: an assessment of the costs of liver transplantation).
Before incorporating costs that were not from the UK into the model they were converted to UK pounds using 2001 purchasing power parities[67] and inflated to 2010/11 prices using the Pay and Prices inflation indices reported in the 2011 PRSSU.[15].
Table 56 contains the prices in 2001 euros reported in the original paper, and the updated 2010/11 costs included in the current model.

Table 56: Annual cost of stages of hepatitis B liver disease

Health State	2001 €	2010/11 £
Compensated cirrhosis	£2, 208	£2,235
Decompensated cirrhosis[¥]	£8, 821	£8,930
Hepatocellular carcinoma	£9, 312	£9,427
Transplantation	£47, 153	£47,737
First year post transplant	£16, 157	£16,357
Post-transplant	£10, 085	£10,210

¥According to Brown 2004[4], treatment patterns and subsequent costs of decompensated cirrhosis were calculated using a distribution by type of complication over a year: ascites (62.5%), variceal haemorrhage (27.5%), hepatic encephalopathy (10%), and bacterial peritonitis (12.2%), as reported by Wong 2004[87]

I.2.4 Genotyping

The clinical review conducted for the question on genotypes of hepatitis B showed differences in the effectiveness of pegIFN in different Genotypes, it showed that the genotypes A and B produced better loss of e antigen than C and D. The odds ratios for the effectiveness of peg IFN in the various genotypes for reduction in e antigen can be found in Table 57.

Table 57: Table of odds ratios for HBeAg loss with peg IFN compared between genotypes

Odds Ratios for HBeAg loss (end of 26 weeks follow up) comparing Genotypes on peg IFN (+ve)			
Comparison of genotype	OR	LCI	UCI
A vs C	3.6	1.4	8.9
A vs B	1.79	0.45	7.14
A vs D	2.4	1.3	4.43
Odds Ratios for undetectable DNA (end of 26 weeks follow up) comparing Genotypes on peg IFN (-ve)			
C vs A	0.29	0.1	0.82
B vs A	0.63	0.21	1.88
D vs A	0.86	0.29	2.56

The different genotypes will be analysed for cost effectiveness and then if one treatment comes out favourable compared to the others then the costs of genotyping will be added to the overall costs to determine whether it would be cost effective to undertake the assays prior to treatment. The cost of line probe assays can be found in Table 58.

Table 58: Cost of genotyping

Test	Unit cost	Source
Line probe assay	£88	Expert opinion

I.2.5 Sensitivity analyses

Various sensitivity analyses were run in order to tell what the impact of changing certain assumptions would be. The sensitivity analyses can be found in Table 63.

Table 59: Sensitivity Analyses

Analysis	Range	Reason
Increased baseline rate of seroconversion	25% - 50%	Raised ALT
Bone scanning on TDF	Annual cost of £179 (Nuclear medicine category 2) Annual cost of £72 (DEXA Scan)	Potential for Increased risk of Bone damage with TDF
Increased Resistance with TDF	Conservative: increasing to 5% over 5 years Non-conservative: increasing to 25% over 5 years	Potential for TDF to develop resistance
Threshold on cost of LAM	Varied to observe changes in CE	LAM is cheap, want to ascertain when how it drives CE
Threshold on cost of ETV	Varied to observe changes in CE	Cost of ETV could impact the results
Threshold on cost of TDF	Varied to observe changes in CE	Cost of TDF could impact the results
Negative starting population	All patients start with negative HBeAg	Negative population differs from positive in natural history and effectiveness
Genotyping	Different genotypes explored (A,B,C,D)	Genotype has effect on natural history and drug function

I.2.6 Model validation

The model was developed in consultation with the GDG; model structure, inputs and results were presented to and discussed with the GDG for clinical validation and interpretation. The model was systematically checked by the health economist undertaking the analysis; this included inputting null and extreme values and checking that results were plausible given inputs. The model was peer reviewed by a second experienced health economist from the NCGC; this included systematically checking the model calculations.

I.2.7 Interpreting results

I.2.7.1 Incremental cost effectiveness ratios

The results of cost-effectiveness analysis are presented as incremental cost-effectiveness ratios (ICERs). ICERs are calculated by dividing the difference in costs associated with two alternative treatments by the difference in QALYs:

Where more than two interventions are being compared, the ICER is calculated according to the following process:

- The interventions are ranked in terms of cost, from least to most expensive.
- If an intervention is more expensive and less effective than the preceding intervention, it is said to be 'dominated' and is excluded from further analysis.
- ICERs are then calculated for each drug compared with the next most expensive non-dominated option. If the ICER for a drug is higher than that of the next most effective strategy, then it is ruled out by 'extended dominance'
- ICERs are recalculated excluding any drugs subject to dominance or extended dominance.
- When there are multiple comparators, the option with the greatest average net benefit may also be used to rank comparators.

NICE's report 'Social value judgements: principles for the development of NICE guidance' sets out the principles that GDGs should consider when judging whether an intervention offers good value for money. In general, an intervention is considered to be cost-effective if either of the following criteria applies:

- The intervention dominates other relevant strategies (that is, is both less costly in terms of resource use and more clinically effective compared with all the other relevant alternative strategies), or
- The intervention costs less than £20,000 per quality-adjusted life-year (QALY) gained compared with the next best strategy.

I.2.7.2 Net benefit framework

The net benefit (NB) framework allows us to rearrange the decision rule using the threshold value.

The decision rule then becomes a simple question of maximising net benefit; the strategy with the greatest average NB is also the most cost effective option. This framework also eliminates the need to consider dominance and calculating ICERs with respect to the most appropriate comparator. As such, it allows us to rank order interventions according to cost-effectiveness.
Using the net benefit framework in probabilistic modelling, we are able to calculate the probability that a strategy will be cost effective (have the greatest NB) over a number of simulations. However, because this method does not take into account the magnitude of the simulations, the optimal treatment is not always the one with the greatest proportion of simulations in its favour. In order to calculate the optimal treatment when there are a large number of strategies, it is most useful to consider the cost-effectiveness frontier.

I.3 Results

I.3.1 Base case

Figure 11 shows that when the costs and effects of each intervention are compared, all interventions are more effective than no treatment. However all sequences are higher cost than no treatment. The sequence that is considered most cost effective compared to the other sequences including no treatment is a sequence that includes Peg interferon, in non-responders they move onto Tenofovir as a second line treatment and then if this fails then adding Lamivudine to Tenofovir is cost effective. This result has a cost effectiveness probability of 70%. The option that has the next highest probability of being cost effective is the strategy but with peg interferon and Lamivudine to start with. This has a probability of around 24%. This means that adding Lamivudine to the Peg interferon could be effective but the two are fairly interchangeable.

Figure 11: Results of Probabilistic cost effectiveness analysis

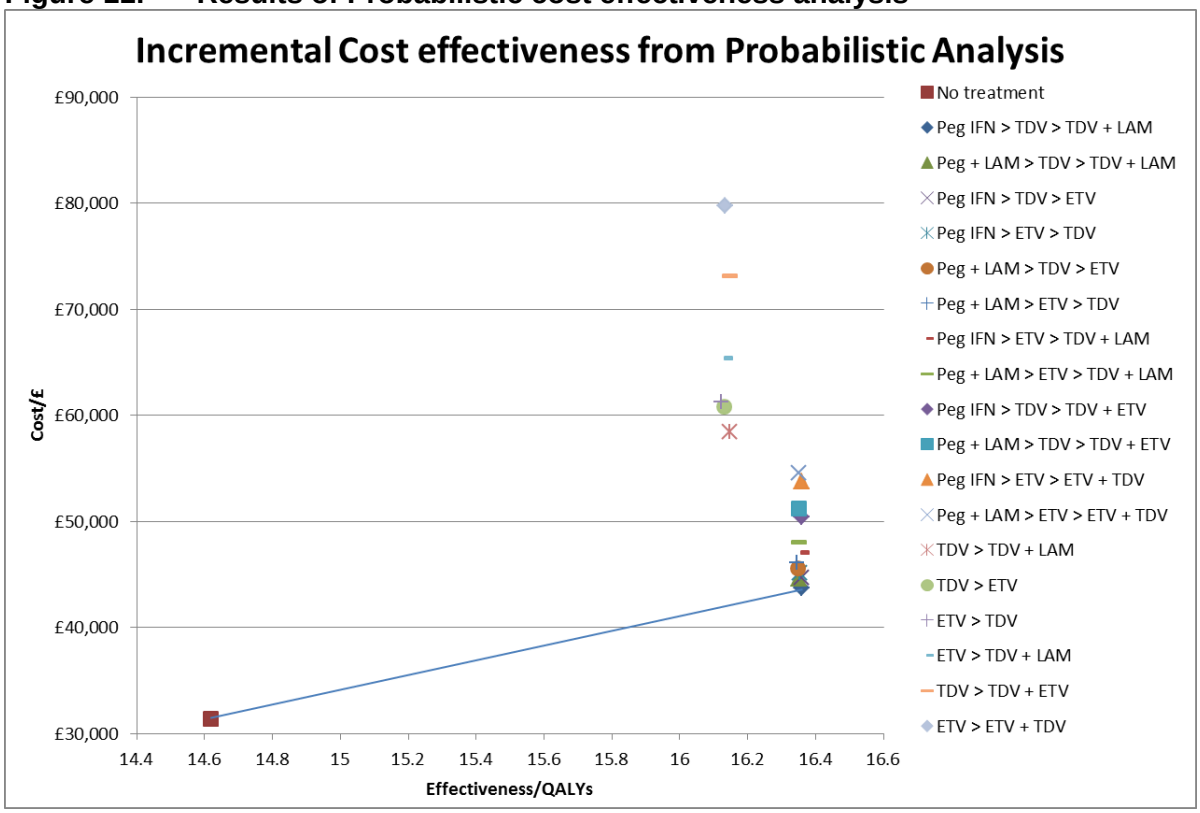

The breakdown of results in Table 60 shows that the differences in both costs and effects between all interventions are small. The Incremental cost effectiveness ratio of the cost effective comparator Peg IFN > TDF > TDF + LAM is £7,488, which is well below the standard £20,000 per QALY threshold. Because many of the ICERs show that treatments are dominated, producing the net monetary benefit allows us to see what options would be best if a person was intolerant of Lamivudine or Tenofovir. This shows that the Peg IFN > TDF > ETV and Peg + LAM > TDF > ETV strategies are the next best options. However the probabilistic analysis also allows us to have a minimum and maximum rank, this shows that there is a large amount of uncertainty in the results.

Table 60: Results of Probabilistic Cost Effectiveness Analysis

Strategy	Cost	Effect	ICER	NMB	Rank (Max – Min)
No treatment	£32,754	14.618			
Peg IFN > TDV > TDV + LAM	£45,794	16.359	£7,488	£281,395	1 (6-1)
Peg + LAM > TDV > TDV + LAM	£46,495	16.351	£7,930	£280,523	2 (7-1)
Peg IFN > TDV > ETV	£46,856	16.358	£8,105	£280,303	3 (7-2)
Peg IFN > ETV > TDV	£47,547	16.355	£8,516	£279,554	4 (8-2)
Peg + LAM > TDV > ETV	£47,680	16.349	£8,625	£279,292	5 (10-2)
Peg + LAM > ETV > TDV	£48,416	16.347	£9,061	£278,516	6 (10-2)
Peg IFN > ETV > TDV + LAM	£49,657	16.358	£9,713	£277,508	7 (11-4)
Peg + LAM > ETV > TDV + LAM	£50,370	16.350	£10,172	£276,627	8 (11-4)
Peg IFN > TDV > TDV + ETV	£52,767	16.359	£11,492	£274,422	9 (13-5)
Peg + LAM > TDV > TDV + ETV	£53,389	16.351	£11,908	£273,629	10 (14-4)
Peg IFN > ETV > ETV + TDV	£56,615	16.358	£13,711	£270,550	11 (15-6)
Peg + LAM > ETV > ETV + TDV	£57,250	16.350	£14,145	£269,747	12 (16-8)
TDV > TDV + LAM	£59,150	16.146	£17,271	£263,778	13 (14-7)

Strategy	Cost	Effect	ICER	NMB	Rank (Max – Min)
TDV > ETV	£61,646	16.130	£19,107	£260,958	14 (16-10)
ETV > TDV	£62,222	16.123	£19,577	£260,243	15 (16-11)
ETV > TDV + LAM	£66,223	16.135	£22,068	£256,470	16 (17-15)
TDV > TDV + ETV	£73,643	16.146	£26,753	£249,285	17 (18-15)
ETV > ETV + TDV	£80,572	16.135	£31,530	£242,121	18 (18-17)

The quantity of error can also be seen in Figure 12. This scatter plot shows the result of each of the 1000 simulations and how the overlap between different sequences is quite marked. The clear result is no treatment at the bottom left. This shows that no-treatment rarely has a cost effective ICER. Apart from that the graph shows only that the order of cost effectiveness is in general maintained throughout the simulations, in-keeping with Figure 11 and in-keeping with the covariance of the effectiveness measures from the NMA.

Figure 12: Scatter plot of ICERs

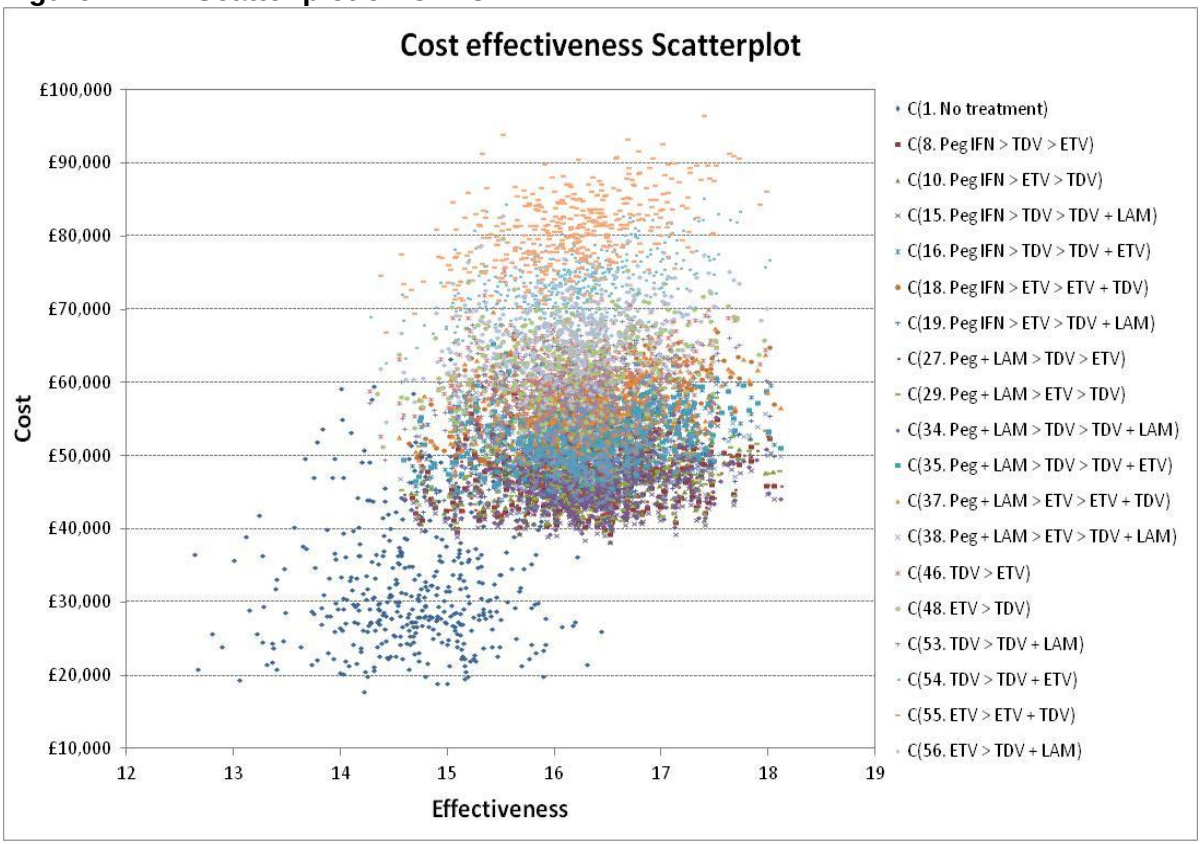

To illustrate this error on a more comparison by comparison basis, a few more scatter plots are shown below. The scatter plots show the error compared between some of the more cost effective options. Figure 13 shows the comparative cost effectiveness between pegIFN and peg IFN + LAM in the two most cost effective options. This graph shows that the error in the model shows that while PegIFN alone is more often cost effective, the two are fairly comparable in terms of cost effectiveness. Figure 14 shows the error around the option of using entecavir first, after pegIFN compared to tenofovir first. This shows that the use of tenofovir is quite clearly more cost effective, however there are situations where entecavir may be cost effective for use first but this is unlikely. The

Figure 13: Scatter plot comparing the cost effectiveness of pegIFN vs pegIFN + lamivudine in the in the two most cost effective options

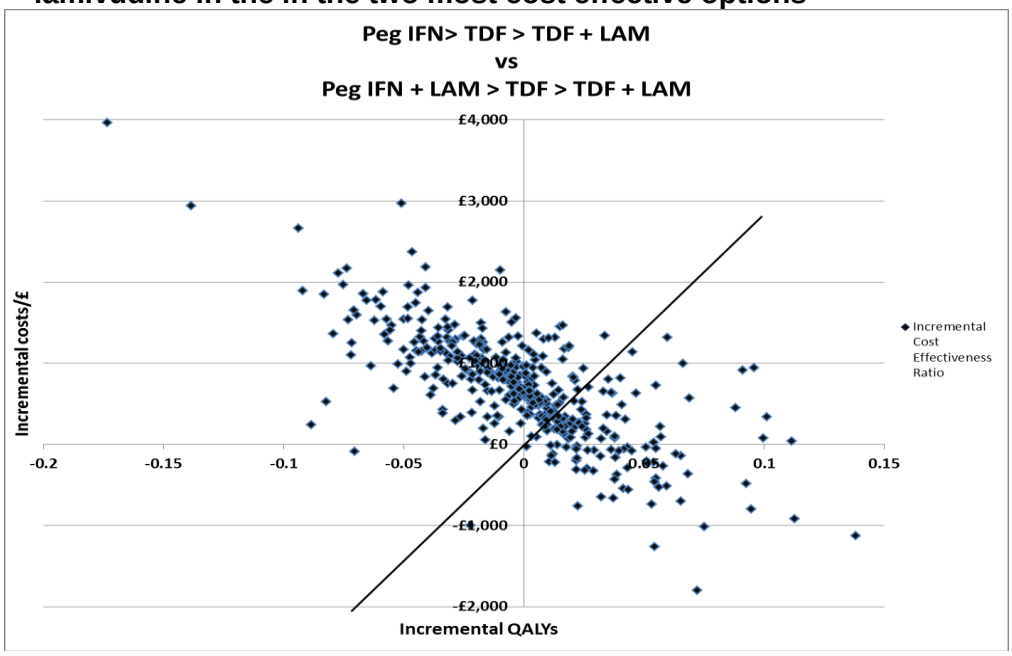

Figure 14: Scatter plot comparing the cost effectiveness of tenofovir first compared with entecavir first

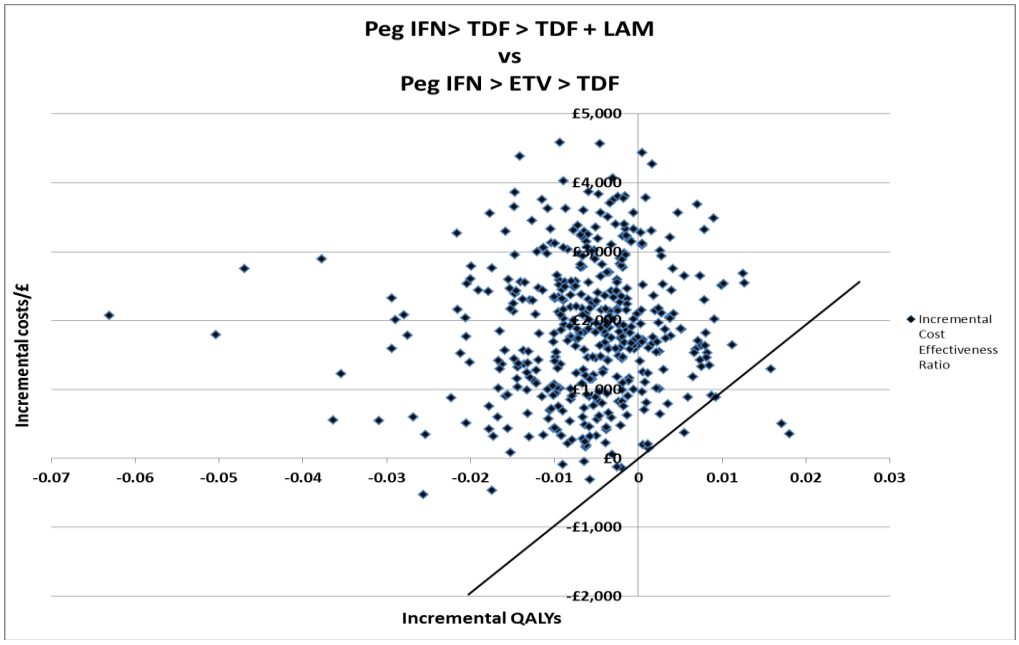

Figure 15: Scatter plot analysing the cost effectiveness of entecavir after tenofovir compared with adding in lamivudine to tenofovir

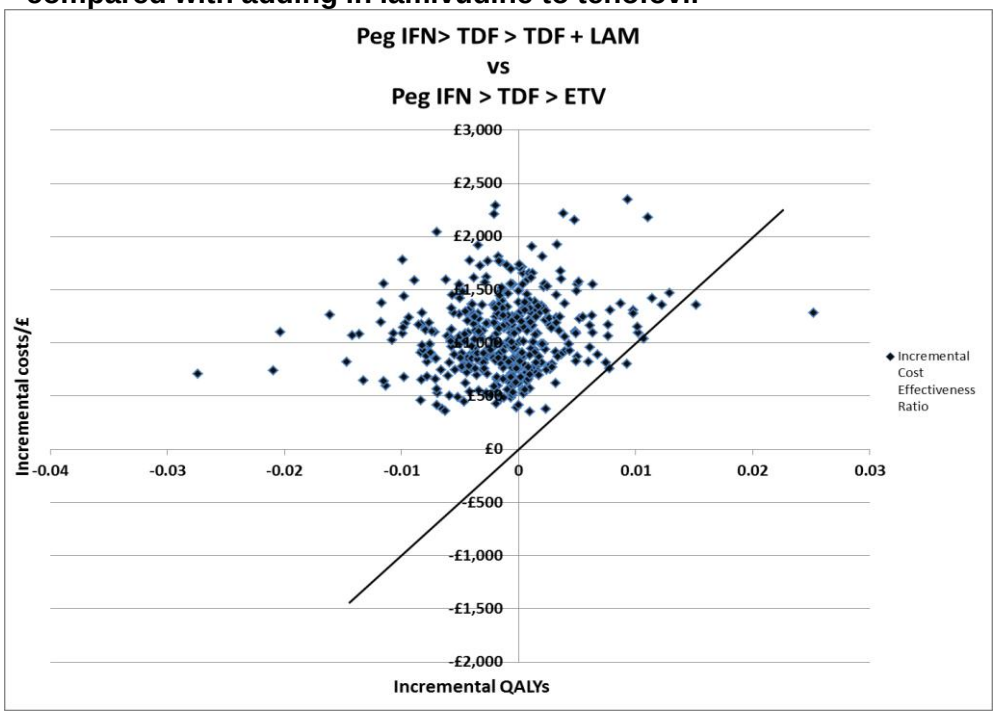

I.3.2 Genotyping

An analysis was run in order to determine what the most cost effective treatment would be given the prevalence of different genotypes in different areas. The results of the analysis can be found in Table 61. The analysis showed that in spite of increased costs from treating genotypes C and D, the sequence PegIFN leading to tenofovir followed by tenofovir plus lamivudine is still cost effective in all the patients who have positive HBV. In patients who are negative, the ICERs do vary. Meaning that in different genotypes the costs and outcomes differ. In genotypes A and D the recommended first-line treatment would be entecavir followed by tenofovir rather than peg interferon, but this difference is borderline. However the difference in costs is greater and it remains unclear whether Peg interferon should be used in these groups. On the basis of this evidence it would be sensible to conclude that genotyping in negative patients could be cost effective but genotyping in positive patients prior to treatment is not cost effective.

Table 61: Cost effectiveness of treatment strategies depending on genotype

Treatment strategy	Cost	QALY	ICER
Genotype A (+ve)			
No treatment	£31,622.68	14.869	
Peg IFN > TDF > TDF + LAM	£43,794.34	16.403	£7,933.62
Peg + LAM > TDF > TDF + LAM	£44,295.8	16.405	£2,58,756.9
Genotype B (+ve)			
No treatment	£31,622.68	14.869	
Peg IFN > TDF > TDF + LAM	£43,640.23	16.409	£7,801.872
Peg + LAM > TDF > TDF + LAM	£44,136.02	16.411	£269,091.7
Genotype C (+ve)			
No treatment	£26,227.74	13.871	
Peg IFN > TDF > TDF + LAM	£41,185.41	15.309	£10,401.22
Peg + LAM > TDF > TDF + LAM	£41,735.55	15.312	£186,090.5
Genotype D (+ve)			
No treatment	£26,227.74	13.871	

Treatment strategy	Cost	QALY	ICER
Peg IFN > TDF > TDF + LAM	£41,189.4	15.309	£10,404.6
Peg + LAM > TDF > TDF + LAM	£41,739.7	15.312	£185,961.6
Genotype A (-ve)			
1. No treatment	£49,337.28	12.056	
48. ETV > TDF	£57,514.94	13.350	£6,313.98
10. Peg IFN > ETV > TDF	£57,610.72	13.284	Dominated
Genotype B (-ve)			
1. No treatment	£49,337.28	12.055	
10. Peg IFN > ETV > TDF	£57,737.09	13.441	£2,416.14
15. Peg IFN > TDF > TDF + LAM	£59,245.23	13.444	£553,070.3
Genotype C (-ve)			
1. No treatment	£49,337.28	12.055	
10. Peg IFN > ETV > TDF	£57,912.80	13.633	£1,402.3
15. Peg IFN > TDF > TDF + LAM	£59,568.33	13.636	£553,508.37
Genotype D (-ve)			
1. No treatment	£49,337.28	12.054	
48. ETV > TDF	£57,514.94	13.349	£6,313.98
10. Peg IFN > ETV > TDF	£57,651.91	13.336	Dominated

In Table 62 the cost of genotyping is added to the cost effective strategy, this is to simulate the effects of genotyping to determine whether peg interferon treatment is cost effective. It is possible to see that in genotypes A and D pegIFN becomes more cost effective compared to no treatment. This shows that the difference in cost effectiveness of pegIFN between genotypes in negative population is marginal. The conclusion from this is that use of genotyping may be cost effective. However, this is highly uncertain. The scatter plot in Figure 16 demonstrates this clearly by showing the spread of Incremental costs and effects compared between the two interventions: ETV > TDF and Peg IFN > ETV > TDF in genotype A. This shows the variation in each probabilistic simulation.

Table 62: Adjusted costs to determine the cost effectiveness of genotyping in negative population

Treatment strategy	Adjusted total Cost	QALY	Adjusted ICER
Genotype A (-ve)			
No treatment	£49,337.28	12.056	
ETV > TDF	£57,772.94	13.35	£6,519.06
Peg IFN > ETV > TDF	£57,610.72	13.284	£2,457.88
Genotype B (-ve)			
No treatment	£49,337.28	12.055	
Peg IFN > ETV > TDF	£57,995.09	13.441	£6,246.62
Peg IFN > TDF > TDF + LAM	£59,503.23	13.444	£502,713.33
Genotype C (-ve)			
No treatment	£49,337.28	12.055	
Peg IFN > ETV > TDF	£58,170.80	13.633	£5,597.92
Peg IFN > TDF > TDF + LAM	£59,826.33	13.636	£551,843.33
Genotype D (-ve)			
No treatment	£49,337.28	12.054	
ETV > TDF	£57,772.94	13.349	£6,514.02
Peg IFN > ETV > TDF	£57,651.91	13.336	£9,310.00

Figure 16: Results of Probabilistic analysis of the cost effectiveness of ETV > TDF compared with Peg IFN > ETV > TDF in negative patients with genotype A.

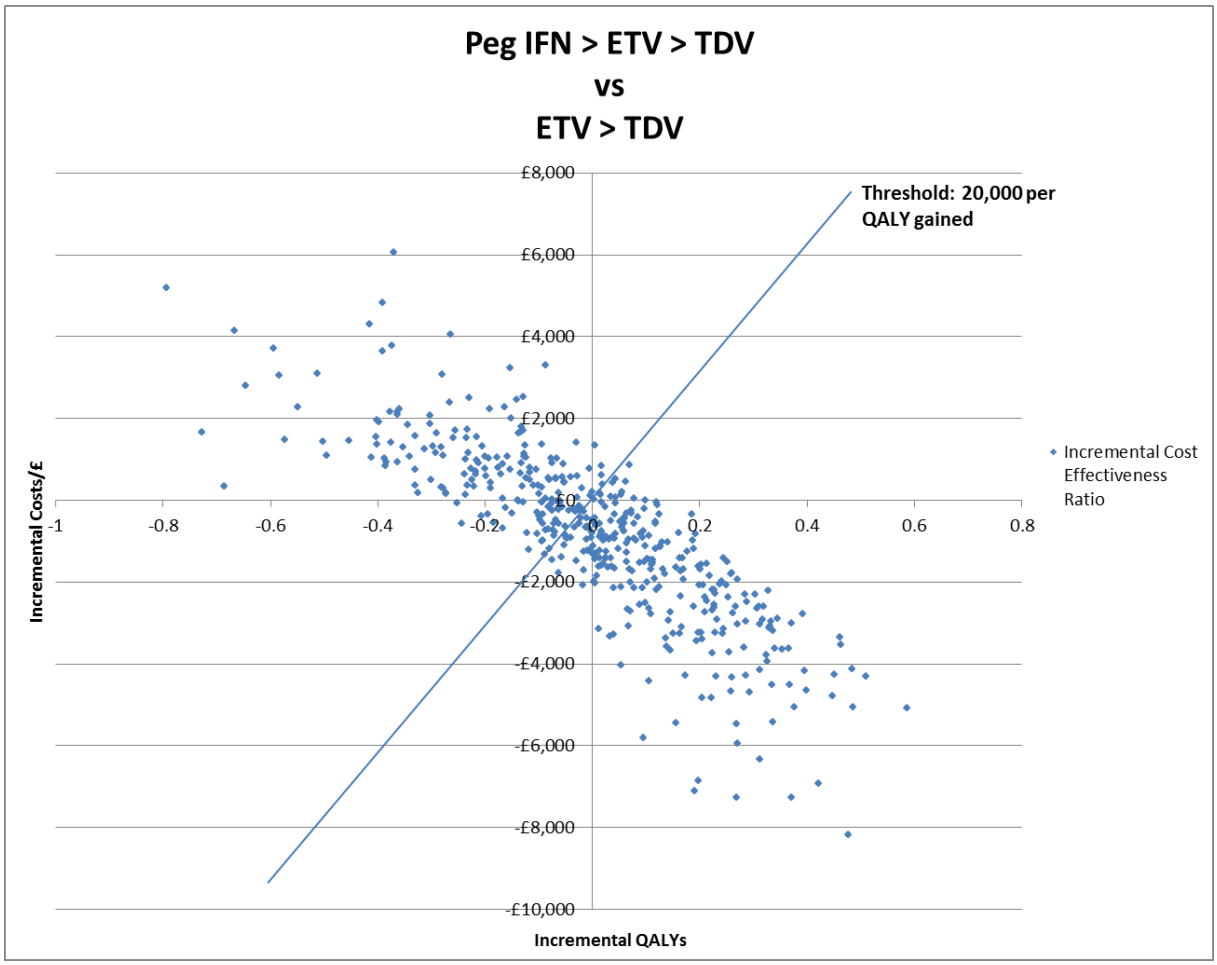

I.3.3 Sensitivity analyses

Several extra analyses were run in order to see what effect they had on the cost effectiveness of the base case sequence. The sensitivity analyses that were run can be found in Table 63. These showed that, in general, the result of Peg IFN > TDF > TDF + LAM being cost effective was stable. However in some situations such as when a patient has raised ALT, leading to increased seroconversion rate, then ETV becomes cost effective. This result highlights how close these two strategies are in cost effectiveness. Throughout the analyses they remain cost effective and are very close in cost effectiveness. The addition of a bone scan to tenofovir does nothing to make it less cost effective. The big difference is in the negative population where Peg IFN > ETV > TDF is the cost effective treatment. This would suggest that when seroconversion is either not a possible (in the negative population) or when it is spontaneous then using ETV is cost effective.

Table 63: Sensitivity Analyses

Treatment strategy	Cost	QALY	ICER
Nuclear medicine category 2: £181 cost added to TDF			
No treatment	£3,2044.03	14.618	
Peg IFN > TDF > TDF + LAM	£45,979.96	16.316	£8,206.92
DEXA scan: £72 cost added to TDF			
No treatment	£31,673.47	14.618	
Peg IFN > TDF > TDF + LAM	£45,219.85	16.316	£7,977.51

Treatment strategy	Cost	QALY	ICER
Baseline rate of e antigen seroconversion: 25%			
No treatment	£29,122.17	15.096	
Peg IFN > ETV > TDF	£38,438.84	16.431	£6,975.792
Peg IFN > TDF > TDF + LAM	£39,105.14	16.436	£142,469.2
Peg IFN > ETV > TDF + LAM	£40,831.32	16.438	£1,105,850
Negative population			
No treatment	£48,907.25	11.795	
Peg IFN > ETV > TDF	£57,416.54	13.450	£5,141.379
Peg IFN > TDF > TDF + LAM	£58,979.93	13.453	£485,061.7
Peg IFN > ETV > TDF + LAM	£61,047.62	13.455	£1,453,464
Reduced efficacy of TDF in second line combinations by 50%			
No treatment	£31,428.69	14.618	
Peg IFN > TDF > TDF + LAM	£44,820.83	16.306	£7,933.39
Peg IFN > TDF > ETV	£45,738.43	16.314	£109,701.44
Peg IFN > TDF > TDF + ETV	£52,179.12	16.319	£1,504,141.81

Various threshold analyses on costs of drugs were also undertaken. These analyses were undertaken to understand the impact that the annual cost of treatments might have on the cost effectiveness of different treatments. In order to assess this, the cost of each drug was varied up and down and the point at which the ICER crossed the £20,000 per QALY threshold was crossed was recorded and the treatment sequence that was cost effective was noted. The results can be found in Table 64. This analysis shows that quite small changes in the annual cost of treatments can result in very different treatments being cost effective. The most notable example is a relatively small drop in price of ETV by around £500 per year would lead to it being considered cost effective.

Table 64: Threshold analyses of cost effectiveness of treatments depending on cost

Annual Cost of TDF (Base case: £2,925)	Cost effective option
£0 - £3,432.17	Peg IFN > TDF > TDF + LAM
£3,432.17- £ 3983.86	Peg IFN > TDF > ETV
£1,119.04 - £5,000.00	Peg IFN > ETV > TDF
Annual Cost of ETV (Base case: £4,420)	**Cost effective option**
£0.00 - £54.95	Peg IFN > ETV > ETV + TDF
£54.95- £3,172.22	Peg IFN > ETV > TDF
£3,172.22 - £3,913.68	Peg IFN > TDF > ETV
£3,913.68 - £10,000.00	Peg IFN > TDF > TDF + LAM
Annual Cost of LAM (Base case: £1,015)	**Cost effective option**
£0.00 - £146.65	Peg + LAM > TDF > TDF + LAM
£146.65- £1,521.60	Peg > TDF > TDF + LAM
£ 1,521.60 - £5,000.00	Peg IFN > TDF > ETV

I.4 Discussion

I.4.1 Summary of results

The results show that Pegylated interferon alfa 2a is the most cost effective treatment as first line for the treatment of chronic hepatitis B infection. If patients do not respond to interferon treatment or undergo seroreversion or viral reactivation after treatment with pegIFN, then Tenofovir is the most cost effective treatjment in HbeAg postitive patients. An increased efficacy of entecavir in negative patients is also observed. There is a great deal of error in these estimates and it is hard to say with absolute certainty that tenofovir is more cost effective than entecavir however, the reduced cost of tenofovir makes this more likely. If a patient does not respond to tenofovir in a very small number of patients, then adding in Lamivudine is likely to be cost effective. The cost of entecavir means that adding entecavir to tenofovir is unlikely to be cost effective.

I.4.2 Limitations & interpretation

There are a few limitations in the model. The first of these is the limitation of the data on combinations of drugs. In the cases where a combination drug is used as a third line drug, the most effective drug is used. This assumes that both drugs remain 100% effective, however, it is unlikely that the drug that was used before another drug was added in is going to remain 100% effective otherwise the other drug would not have been added. This was, however, tested in a sensitivity analysis where the effectiveness of tenofovir in combinations that included tenofovir was reduced by a full 50%. In this situation, the strategy that used tenofovir second line and third line in combination with Lamivudine remained cost effective, suggesting that this limitation does not affect the robustness of the model.

The data limitations stretched into the transition probabilities and various parameters were assumed, such as the transition from HBeAg negative/HBV DNA positive to HBV DNA positive CC. in this instance the same assumptions that were made in the study that they were taken from, was made. This insured consistency with published models but did nothing to ensure the accuracy of the parameter. It was however included as a stochastic point estimate and therefore varied in the probabilistic analysis. This applies equally to all the parameters where there was a similar kind of uncertainty but these are outlined in Table 35.

Another area of uncertainty was that of the resistance rates. While no resistance has been reported for tenofovir over three years there is no available data for more longer than this and no data for tenofovir resistance in adefovir resistant patients. Where no data was available, it was assumed that there was 0% resistance as this is what the trend from the previous 3 years had shown. The same is true for lamivudine and entecavir. Lamivudine resistance data in positive patients was available for 4 years, it was assumed that the resistance rates held steady at 70% thereafter. Entacavir resistance never went above 1.2% in Lamivudine naïve patients and it was also assumed to hold steady. It was possible that there would be increased resistance in one or all of these treatments but the lack of data prevented us from looking at this possibility.

I.4.3 Generalizability to other populations / settings

The model is appropriate for patients with chronic Hepatitis B virus. It will not be applicable to patients with other forms of hepatitis. The model is also applicable to the UK NHS and PSS setting its applicability to other settings might be limited.

I.4.4 Comparisons with published studies

The current available studies on this topic such as the study by Dakin 2010[16] show that TDF is cost effective as first line however this study did not look at the cost effectiveness of pegIFN. The NICE HTA, TA96, also recommended the use of pegIFN as first line treatment. The NICE technology appraisals on Entecavir and Tenofovir (TA153 and TA173) also recommend the use of these products. Therefore the model produced here is in-keeping with the available evidence on the topic.

Appendix J: Network meta analysis (NMA) of interventions in the pharmacological treatment of chronic hepatitis B for adults

J.1 Introduction

The results of conventional meta-analyses of direct evidence alone (as presented in the GRADE profiles in chapter X and forest plots in appendix X) does not help fully inform which intervention is most effective in the treatment of chronic hepatitis B. The challenge of interpretation has arisen for three reasons:

- In isolation, each pair-wise comparison does not fully inform the choice between the different antiviral treatments and having a series of discrete pair wise comparisons can be disjoint and difficult to interpret.
- Direct comparison of treatments of interest is not available, for example, tenofovir versus entecavir.
- There are frequently multiple overlapping comparisons (for example entecavir versus adefovir, entecavir versus adefovir versus tenofovir), that could potentially give inconsistent estimates of effect.

To overcome these issues, a hierarchical Bayesian NMA was performed. Advantages of performing this type of analysis are:

- It allows the synthesis of data from direct and indirect comparisons without breaking randomisation, to produce measures of treatment effect and ranking of different interventions. If drug A has never been compared against drug B head to head, but these two drugs have been compared to a common comparator, then an indirect treatment comparison can use the relative effects of the two treatments versus the common comparator. All the randomised evidence is considered within the same model.

- For every intervention in a connected network, a relative effect estimate (with its 95% credible intervals) can be estimated versus another intervention. These estimates provide a useful clinical summary of the results and facilitate the formation of recommendations based on all of the best available evidence. Furthermore, these estimates will be used to parameterise treatment effectiveness in the de novo cost-effectiveness modelling.

Conventional fixed effects meta-analysis assumes that the relative effect of one treatment compared to another is the same across an entire set of trials. In a random effects model, it is assumed that the relative effects are different in each trial but that they are from a single common distribution and that this distribution is common across all sets of trials.
NMA requires an additional assumption over conventional meta-analysis. The additional assumption is that intervention A has the same effect on people in trials of intervention A compared to intervention B as it does for people in trials of intervention A versus intervention C, and so on. Thus, in a random effects network meta-analysis, the assumption is that intervention A has the same effect across trials of A versus B, A versus C and so on.
The terms indirect treatment comparisons, mixed treatment comparisons, and network meta-analysis are used interchangeably. We use the term network meta-analysis as the network consists of both indirect treatment comparisons (some trials have a common comparator and some do not) and mixed treatment comparisons (with at least one closed loop, combination of direct and indirect evidence).

J.2 Methods

J.2.1 Study selection and data collection

To estimate the relative efficacy of different antiviral treatments, a NMA was conducted using all the relevant RCT evidence identified in the clinical evidence review (conventional meta-analysis). As with conventional meta-analyses, this type of analysis does not break the randomisation of the evidence, nor does it make any assumptions about the additive effects of combination interventions. The effectiveness of a particular antiviral treatment was derived only from RCTs that included one of the selected treatments in a trial arm.
From the outset, we sought to minimise any clinical or methodological heterogeneity by focusing the analysis on selected studies that matched the prespecified NMA protocol (Table 1). All of the dosages of drugs in the included RCTs were within the therapeutic range as indicated by the British National Formulary (BNF).

Six networks of evidence were identified, defined by population and outcome measure.
For HBeAg positive and nucleoside naïve adults with chronic hepatitis B:

- Network 1: Proportion of people achieving undetectable HBV DNA (<300 copies/ml) at the end of 12 months of antiviral treatment
- Network 2: Proportion of people achieving HBeAg seroconversion at the end of 12 months of antiviral treatment

For HBeAg positive and lamivudine resistant adults with chronic hepatitis B:

- Network 3: Proportion of people achieving undetectable HBV DNA (<300 copies/ml) at the end of 12 months of antiviral treatment
- Network 4: Proportion of people achieving HBeAg seroconversion at the end of 12 months of antiviral treatment

For HBeAg negative and nucleoside naïve adults with chronic hepatitis B:

- Network 5: Proportion of people achieving undetectable HBV DNA (<300 copies/ml) at the end of 12 months of antiviral treatment

For HBeAg negative and lamivudine resistant adults with chronic hepatitis B:

- Network 6: Proportion of people achieving undetectable HBV DNA (<300 copies/ml) at the end of 12 months of antiviral treatment

Table 65: Agreed NMA protocol

Study design	Only published RCTs Phase II or III would be included. Exclusion: • RCTs comparing any pegylated interferon (a-2a) or interferon (2a or 2b) with placebo (TA96 recommendation to be incorporated in the guideline) • studies comparing the same drug in different doses
Subjects	Four groups: HBeAg positive and nucleoside naïve adults with chronic hepatitis B HBeAg positive and lamivudine resistant adults with chronic hepatitis B HBeAg negative and nucleoside naïve adults with chronic hepatitis B HBeAg negative and lamivudine resistant adults with chronic hepatitis B Exclusion: children, young people, pregnant women, pre, post and peri transplant patients, patients with advanced, decompensated cirrhosis, inactive liver disease, people with coinfections with HCV, HDV and HIV).
Interventions	The following drugs will be included either as monotherapies, in combination or as sequential treatment: • Pegylated interferon alpha-2a

	• Pegylated interferon alpha-2b • Interferon alpha (2a and 2b) • Tenofovir (245mg once daily) • Entecavir (0.5mg once daily) • Adefovir (10mg once daily) • Lamivudine (100mg once daily) • Telbivudine (600mg once daily) • Emtricitabine (in combination with tenofovir) (tenofovir disoproxil 245 mg, emtricitabine 200 mg daily) Lamivudine will be used as the baseline comparator (reference treatment) as it has been most commonly compared. None of the antiviral drugs will be excluded from the network as along as it is connected with the rest of the interventions.
Outcome measures	Trials will only be included if they report at least one of the below outcomes after 48-52 weeks treatment. ***For the networks of HBeAg positive adults with chronic hepatitis B*** • proportion of patients with undetectable HBV DNA (lower detection threshold: 300 copies/ml) • proportion of patients with HBeAg seroconversion ***For the networks of HBeAg negative adults with chronic hepatitis B*** • proportion of patients with undetectable HBV DNA (lower detection threshold: 300 copies/ml)
Date of publication	No limits will be used
Language	Only English
Methodological considerations	• Both fixed and random effect models would be applied to all the networks. Model fit of random and fixed effects models will be assessed based on residual deviance and deviance information criteria (DIC). The model with the smallest DIC is estimated to be the model that would best predict a replicate dataset which has the same structure as that currently observed. A small difference in DIC between the fixed and random effects models implies that the better fit obtained by adding random effects does not justify the additional complexity. • If the difference in DIC between a fixed and random effect model was fewer than 3-5 points, we will report results from fixed effects model as it doesn't make as many assumptions, contains fewer parameters and it is easier for clinical interpretation than the random effects model. • The GDG agreed to include studies with mixed populations under the following conditions: a) Studies with mixed population of HBeAg positive and negative patients if at least 2/3 of the sample are HBeAg positive (for the 1st, 2nd, 3rd and 4th networks) or HBeAg negative (for the 5th and 6th networks) b) Mixed population of nucleoside naïve and previously treated patients if at least 2/3 of the sample were nucleoside naive (for the 1st and 3rd networks) • The GDG agreed that the lowest limit of detection threshold of HBV DNA levels should be statistically transformed when studies reported a threshold other than the predefined threshold of <300 copies/ml. This decision was made in order to make the most use of the available evidence that employed different thresholds of HBV DNA lowest limit of detection. The validated statistical formula developed by Dakin et al (2010) was used to perform this transformation. • The GDG agreed to include studies on interferon and pegylated interferon that had duration less than 12 months (but at minimum of 6 months) as it was expected that the treatment effect at 12 months would be comparable to the one at the end of 6 months. • The GDG considered that in the absence of evidence for the use of tenofovir

	for lamivudine resistant populations with chronic hepatitis B and given its clinical importance for that population, evidence on tenofovir from nucleoside naïve population would be indirectly used to inform the networks (3rd and 4th) on lamivudine resistant populations. This indirect use was based on the assumption that the efficacy of tenofovir is comparable against nucleoside naïve and lamivudine resistant populations as indicated by in vivo and in vitro studies (a systematic review will be conducted to support this assumption). • The GDG agreed for the technical team to perform two types of sensitivity analyses by restricting to studies which included : a) Solely nucleoside naïve populations (for the 1st and 2nd networks) b) The agreed threshold of 300 copies/ml (for the 1st , 3rd, 5th and 6th networks)

(a) <Insert Note here>

J.2.2 Outcome measures

The GDG considered the following outcomes the most important in assessing the clinical effectiveness of antiviral treatments within the pre-specified one year time frame:

1. proportion of adults with chronic hepatitis B who achieved undetectable HBV DNA (<300 copies/ml), as an indication of viral suppression, a short-term goal or response induced by treatment. By suppressing HBV replication persistently, the risk of disease progression (cirrhosis, decompensated cirrhosis, end-stage liver disease, hepatocellular carcinoma and death) would be lessened.
2. proportion of adults with chronic hepatitis B who achieved HBeAg seroconversion. This outcome is associated with a complete and definitive remission of the activity of chronic hepatitis B and cessation of antiviral therapy may be considered if there is sustained HBeAg seroconversion, accompanied by undetectable HBV DNA and ALT normalisation.

HBsAg seroconversion is considered the optimal goal of antiviral treatment and the only surrogate marker of successful immunologic control and sustained response, but was not included in the NMA as it is a rare outcome and is unlikely to be achieved at the end of one year antiviral treatment, especially for nucleos(t)ides.

Outcome measures were calculated on an available case basis (i.e. the analysis was based on the number of people who completed 12 months of antiviral treatment), regardless of how the original study investigators analysed their data. Further details about available-case analysis can be found in the methods chapter (appendix?).

J.2.3 Comparability of interventions

The interventions compared in the model were those included in the clinical evidence review presented in chapter X of the full guideline and in appendix X. Studies were included only if they met the inclusion criteria pre-specified in the NMA protocol.
The treatments included in each network are shown in **Table 66**.

Table 66: Antiviral treatments included in the four network meta-analyses of HBeAg positive adults with chronic hepatits B

Network 1: Proportion of nucleoside naïve adults with undetectable HBV DNA (<300 copies/ml)	Network 2: Proportion of nucleoside naïve adults with HBeAg seroconversion	Network 3: Proportion of lamivudine resistant adults with undetectable HBV DNA (<300 copies/ml)	Network 4: Proportion of lamivudine resistant adults with HBeAg seroconversion
Lamivudine (LAM)	Lamivudine (LAM)	Lamivudine	Lamivudine

Network 1: Proportion of nucleoside naïve adults with undetectable HBV DNA (<300 copies/ml)	Network 2: Proportion of nucleoside naïve adults with HBeAg seroconversion	Network 3: Proportion of lamivudine resistant adults with undetectable HBV DNA (<300 copies/ml)	Network 4: Proportion of lamivudine resistant adults with HBeAg seroconversion
Placebo (PLC)	Placebo (PLC)	Lamivudine plus Adefovir	Lamivudine plus Adefovir
Interferon plus lamivudine (IFN + LAM)	Entecavir (ETV)	Entecavir	Entecavir
Entecavir (ETV)	Adefovir (ADV)	Adefovir	Adefovir
Adefovir (ADV)	Telbivudine (TlB)	Tenofovir	Tenofovir
Interferon (2a, 2b) (IFN)	Interferon (2a, 2b) (IFN)	Entecavir plus Adefovir	-
Telbivudine (TBL)	Interferon plus lamivudine (IFN + LAM)	-	-
Tenofovir (TDF)	Tenofovir (TDF)	-	-
Pegylated interferon a-2a (Peg 2a)	Pegylated interferon a-2a (Peg 2a)	-	-
Pegylated interferon a-2a plus lamivudine (Peg 2a+LAM)	Pegylated interferon a-2a plus lamivudine (Peg 2a+LAM)		
Telbivudine plus LAM (TlB + LAM)	Telbivudine plus LAM (TlB + LAM)		
Adefovir plus Lamivudine (ADV +LAM)	Adefovir plus Lamivudine (ADV +LAM)		
Switching from lamivudine to combination therapy of interferon (2a, 2b) plus lamivudine (LAM -> IFN+LAM)	Switching from lamivudine to combination therapy of interferon (2a, 2b) plus lamivudine (LAM -> IFN+LAM)		
Switching from adefovir to telbivudine (ADV->TBL)	Switching from adefovir to telbivudine (ADV ->TBL)		

Table 67: Antiviral treatments included in the two network meta-analyses of HBeAg negative adults with chronic hepatits B

Network 5: Proportion of nucleoside naïve adults with undetectable HBV DNA (<300 copies/ml)	Network 6: Proportion of lamivudine resistant adults with undetectable HBV DNA (<300 copies/ml)
Lamivudine	-

Network 5: Proportion of nucleoside naïve adults with undetectable HBV DNA (<300 copies/ml)	Network 6: Proportion of lamivudine resistant adults with undetectable HBV DNA (<300 copies/ml)
Placebo	-
Entecavir	-
Telbivudine	-
Adefovir	-
Tenofovir	-
Interferon plus lamivudine (IFN + LAM)	-
Pegylated Interferon a2a	-
Pegylated Interferon a2a + Lamivudine	-
Pegylated Interferon a2a + Adefovir	

(a) <Insert Note here>

J.2.4 Statistical analysis

Lamivudine was selected as the baseline comparator (treatment "1") for all networks. Although the GDG discussed the option of placebo as the baseline comparator at the protocol development stage, lamivudine was considered to be a more appropriate choice of baseline comparator for the following reasons:

- Lamivudine was evaluated in the largest number of RCTs.
- Only a few small studies compared antiviral drugs against placebo. Undetectable HBV DNA is a treatment-induced response. Therefore without any treatment (placebo), event rate would be zero. Thus making placebo the baseline comparator would lead to non-defined treatment effects. Placebo was placed as "treatment 2" in the networks.

A hierarchical Bayesian network meta-analysis (NMA) was performed using the software WinBugs version 1.4. This is a method which preserves randomisation within trials.
In order to be included in the analysis, a fundamental requirement is that each treatment is connected directly or indirectly to every other intervention in the network. For each outcome for each population subgroup, a diagram of the evidence network was produced in Figure 17 -2 and presented in section J.3.
The analysis used both fixed and random effects logistic regression models. A fixed effects model typically assumes that there is no variation in relative effects across trials for a particular pairwise comparison and any observed differences are solely due to chance. For a random effects model, it is assumed that the relative effects are different in each trial but that they are from a single common distribution. The variance reflecting heterogeneity is often assumed to be constant across trials.
In a Bayesian analysis, for each parameter the evidence distribution is weighted by a distribution of prior beliefs. Markov Chain Monte Carlo (MCMC) algorithm was used to generate a sequence of samples from a joint posterior distribution of two or more random variables and is particularly well adapted to sampling the treatment effects (known as posterior distribution) of a Bayesian network. A non-informative prior distribution was used to maximise the weighting given to the data and to generate the posterior distribution for each log odds ratio (OR) of interest in the networks. We used the median of the distribution as our point estimate and the centiles provided the 95% credible interval. Non-informative priors were selected which were normally distributed with a mean of 0 and standard deviation of 10,000. One of the main advantages of the Bayesian approach is that the method leads to a decision framework that supports decision making. The Bayesian approach also allows the probability that each intervention is best, for achieving a particular outcome to be calculated.
When trials reported zero event rate in an intervention arm (especially in the case of the placebo arm) and as many of these trials were small, we added an arbitrary constant (adding 1.0 to both the nominator and denominator) in order to obtain non-infinite estimates of treatment effects and non-infinite variance. Non-infinite estimates of treatment effects and

non-infinite variance would lead to the occurrence of unstable network (with too many zero cells), which could either fail to converge, or converge to a posterior with unrealistically high standard deviation on some treatment effects. This approach is very similar to the one described by Kirkwood and Sterne 2007[40] and the standard approach of adding 0.5 to zero event arms. However, adding 0.5 is not feasible for this analysis, since the WinBugs code specifies that the number of patients experiencing the event for each trial arm follows a binomial distribution.

We adapted a three-arm random effects model template for the networks as developed from the University of Bristol website (https://www.bris.ac.uk/cobm/research/mpes/mtc.html). This model accounts for the within-study correlation between treatment effects induced by multi-arm trials.

For the analyses, a series of 50,000 burn-in simulations were run to allow the posterior distributions to convergence and then a further 50,000 simulations were run to produce the outputs. Convergence was assessed by examining the history and kernel density plots. Goodness of fit of the model was also estimated by using the posterior mean sum of the deviance contributions for each item by calculating the residual deviance and deviance information criteria (DIC). If the residual deviance was close to the number of unconstrained data points (the number of trial arms in the analysis) then the model was explaining the data at a satisfactory level. The choice of a fixed or random effects model can be made by comparing their goodness-of-fit to the data.

The results, in terms of relative risk, of pair-wise meta-analyses were presented in the clinical evidence review (Chapter X, and Appendix X).

The outputs of the NMA were treatment specific log odds ratios (ORs). Log ORs and their 95% credible intervals (CI) were generated for every possible pairs of comparisons by combining direct and indirect evidence in the network.

The baseline probability for a given outcome was calculated by adding up the total number events across the baseline arms of the trials and dividing by the total number at risk. Once the treatment specific probabilities for response were calculated, they were divided by the baseline probability to get treatment specific relative risks :

Differences between treatments were considered statistically significant at the 0.05 level if the 95% credible interval for the OR did not cross 1.

In addition to the assessment of probability that each antiviral drug was the best treatment by calculating the log OR of each drug compared to lamivudine, and counting the proportion of simulations of the Markov chain in which each intervention had the highest log OR, the overall ranking of interventions was also calculated according to their log ORs compared to lamivudine (baseline comparator).

There are two key assumptions behind a NMA:

1. Similarity assumption – randomisation holds only within individual trials, not across the trials. Therefore, if the trials differ among the direct comparisons (e.g. entecavir vs. adefovir trial differ from adefovir vs. placebo trial), in terms of patient characteristics, measurement and/or definition of outcome, length of follow up, the similarity assumption is violated and this would bias the analysis. Potential sources of heterogeneity arising from trials of antiviral treatments are:

- Different population, for example, mixed populations of HBeAg positive and negative, age, baseline HBV DNA and ALT levels, nucleos(t)ide naïve vs. previous antiviral treatment, disease severity indicated by the presence of cirrhosis. As described in the pre-specified NMA protocol, separate NMAs were performed for HBeAg positive and negative patients. Only studies with a minimum of 2/3 nucleos(t)ide naïve patients were included, to ensure similarity in a network. Sensitivity analyses were carried out if studies showed significant differences in baseline characteristics (e.g. HBV DNA levels) between the intervention arms.

- Different HBV DNA thresholds (copies/mL) used for the lowest limit of detection. A validated formula, generated by Dakin and colleagues (ref), was used for threshold transformation. For instance, if a trial reported the number of patients who achieved HBV DNA less than 400 copies/mL instead of 300 copies/mL, as defined in the NMA protocol, the formula would be applied in order to compute the number of patients achieving HBV DNA <300 copies/mL.

2. Consistency assumption - it is important that for a network that contains loops, the indirect comparisons are consistent with the direct comparisons. Discrepancies between direct and indirect estimates of effect may result from several possible causes. First, there is 'chance' and if this is the case then the network meta-analysis results are likely to be more precise as they pool together more data than conventional meta-analysis estimates alone. Second, there could be differences between the trials included in terms of their clinical or methodological characteristics.

We explored network inconsistency of direct and indirect treatment comparison by checking whether the mean estimates (OR) of the direct treatment comparisons (reported by the study) were within the confidence intervals of the estimates (OR) generated from the NMA, for the same treatment comparison. If the mean OR of a direct treatment comparison is outside the confidence intervals of the estimates generated from the NMA, it indicates inconsistency for that specific treatment comparison. An example of this can be found in figure .

Between study heterogeneity was further explored in the results produced by the random effects model by comparing the size of effect for each treatment to the extent of between studies variation. This approach predicts the confidence intervals of the outcome of a future trial of infinite size taking into account between trials variation, and comparing with the confidence intervals of the log ORs based on the sampling error only (within study variation). When there is no or little difference between the confidence intervals of the log ORs for the treatments included in the network based on a future trial of infinite size and the confidence intervals of the log ORs based on sampling error, then we would not expect considerable heterogeneity between the studies[20].

J.3 Results

J.3.1 Nucleoside naïve adults with HBeAg positive chronic hepatitis B (CHB)

A total of 21 studies from the original (pair-wise comparisons) evidence review met the inclusion criteria for the network for HBeAg positive adults with chronic hepatitis B. Figures 1 and 2 show the two networks for undetectable HBV DNA (<300copiesmL) and HBeAg seroconversion. The type of line connecting two treatments indicates the number of included studies in which the interventions connected by the line were compared directly. Seven studies were excluded from the NMA. Table 4 shows the list of excluded studies and reason(s) for exclusion.

Figure 17: Network for the proportion of people achieving undetectable HBV DNA (<300 copies/ml) at the end of 12 months of antiviral treatment

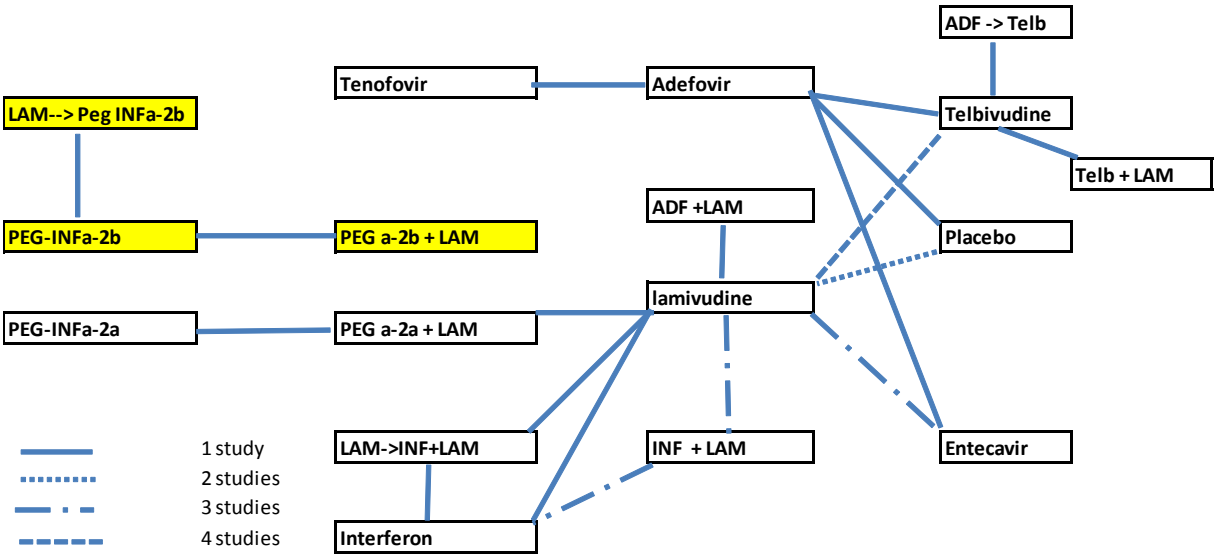

Note: Boxes in yellow are the antiviral treatments included in the evidence review of direct comparisons but not connected with the network of undetectable HBV DNA for HBeAg positive people with CHB

Figure 18: Network for the proportion of people achieving HBeAg seroconversion at the end of 12 months of antiviral treatment

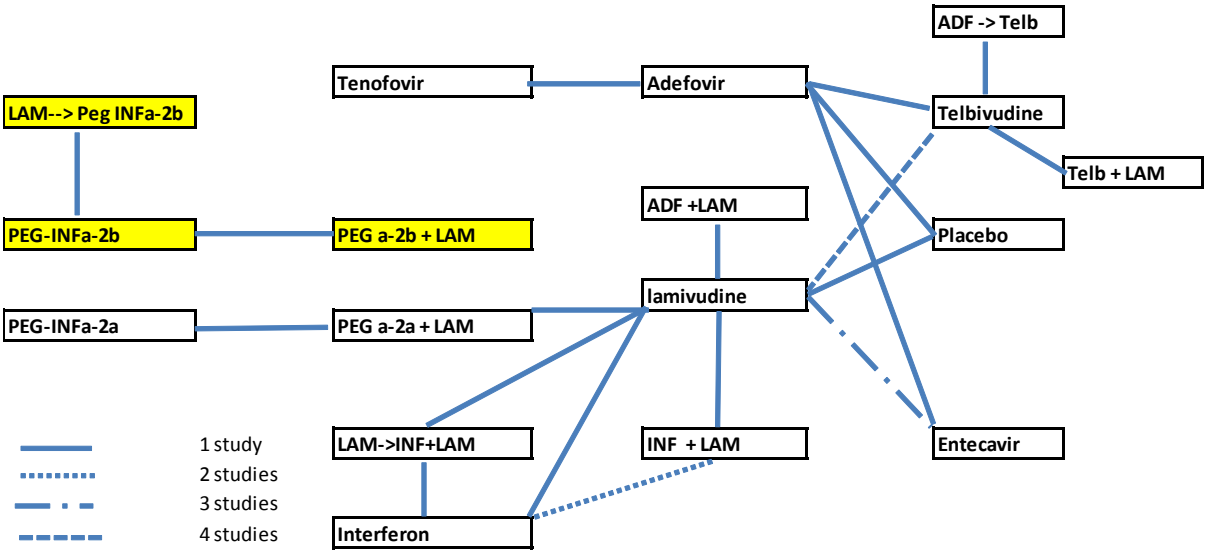

Note: Boxes in yellow are the antiviral treatments included in the evidence review of direct comparisons but not connected with the network of HBeAg seroconversion for HBeAg positive people with CHB

Table 68: Studies from the direct evidence review which excluded from the NMA for the 1st and 2nd networks

Trials excluded from the NMA of nucleoside naïve adults with HBeAg psotivie CHB	Reason(s) for exclusion
Suh 2010	Outcomes measured at the end of 24 weeks treatment
Berg 2010	Participants with previous LAM use more than 1/3 of the

	total sample (58%)
Sarin 2007	Drug sequence not currently used in clinical settings
Sarin 2005	Drug sequence not currently used in clinical settings
Hasan 2003	Drug sequence not currently used in clinical settings
Hann 2010	All participants in the study (100%) had previous LAM use
Liaw 2009	Outcomes measured at the end of 104 weeks

The majority of trials used similar methods (for example, randomisation procedure and statistical analysis) and comparable patient populations (Table 4). Of 21 trials, 11 were double-blinded (Chang 2006; Yao 2007; Hou 2008; Lai 2007; Lai 2005; Dienstag 1999; Lai 1998; Marcellin 2003; Cindoruk 2002; Chan 2007; Marcellin 2008), 2 were partially double-blinded (Lau 2005; Schalm 2000) 3 were unblinded (Sung 2008; Yalcin 2003; Leung 2008) and 5 were unclear about blinding (Ren 2007; Jang 2004; Yuki 2008; Barbaro 2001; Auaz 2006). Eleven trials had adequate randomisation procedure (Lau 2005; Schalm 2000; Chang 2006; Yao 2007; Hou 2008; Lai 2005; Lai 2007; Barbaro 2001; Marcellin 2003; Chan 2007; Marcellin 2008) and 10 trials had adequate allocation concealment (Lau 2005; Chang 2006; Yao 2007; Hou 2008; Lai 2007; Lai 2005; Barbaro 2001; Marcellin 2003; Chan 2007; Marcellin 2008).

All included trials but one (Dienstag 1999) did not show baseline differences in HBV DNA levels between the two trial arms. Two trials included people with low HBV DNA levels (Schalm 2000; Lai 1998) at baseline, compared to other trials. Three trials contained people with high HBV DNA levels (Ayaz 2006; Barbaro 2010, Diestang 1999) at baseline, relative to other trials. One trial provided no information on HBV DNA threshold (lowest limit of detection) (Cindoruk 2002).

Seven out of the 21 included studies used the threshold of 300 copies/ml lower limit of HBV DNA detection, 3 studies used the threshold of 400 copies/ml and 2 studies used the threshold of 200 copies/ml, respectively. The remaining 7 studies included higher HBV DNA sensitivity thresholds (ranged from 1 to 5pg/ml) with 5 of them comparing interferon plus lamivudine combination therapy versus lamivudine or interferon alone. HBV DNA levels were converted to the same common measure unit (copies/mL) when possible using the following formula; one international unit (IU) = 5.26 copies, 1 pg/ml = 2.83×10^5 copies/ml = 5.45 log10 copies/ml.
The population of the majority of included studies (15 trials) was solely nucleoside naïve people with chronic hepatitis B (Table 5).

The trial data from the 21 studies included in the NMA for the proportion of nucleoside naïve adults achieving undetectable HBV DNA (<300 copies/ml) at the end of 12 months of antiviral treatment are shown in **Table 70**. The trial data from the 17 studies included in the NMA for the proportion of nucleoside naïve adults achieving HBeAg seroconversion at the end of 12 months of treatment are presented in **Table 71**.

Table 69: Baseline characteristics of included studies in the network of nucleoside naïve adults with HBeAg positive CHB infection

Study	Comparators	Patients' characteristics	Baseline HBV DNA levels (mean (SD))	Baseline ALT levels (mean (SD)/median (range))	HAI (median (range))	Cirrhosis (%)
Marcellin 2003	Adefovir	24% prior IFN treatment	8.25 (0.90) log copies/ml	139 (154) U/L	-	-
	Placebo		8.12 (0.89) log copies/ml	139 (131) U/L	-	-
Lau 2005	PEG IFNa-2a	12% prior IFN and 13% prior LAM treatment	9.9 (2.1) log copies/ml	114.6 (114.3) IU/L	-	18%
	PEG IFNa-2a +LAM		10.1 (1.9) log copies/ml	114.9 (94.1) IU/L	-	15%
	Lamivudine		10.1 (2.0) log copies/ml	102.3 (78.4) IU/L	-	17%
Schalm 2000	lamivudine (52w)	Mixed; majority HBeAg (+); not treated for the last 6 months	1.74 (0.75) log10 copies/ml	3.2 (3.4) x ULN*	-	4%
	IFN (16w)		1.78 (0.77) log10 copies/ml	3.1 (2.1) x ULN*	-	12%
	LAM(8w)->LAM+IFN(16W)		2.04 (0.66) log10 copies/ml	3.3 (2.8) x ULN*	-	6%
Dienstag 1999	Lamivudine	Treatment naïve	102.2 (0.8-1753) pg/ml=555 log10 copies/ml	125 (46-401) U/L	10 (0-15)	6%
	Placebo		56.5 (0.8-653) pg/ml=307 log10 copies/ml	135 (33-592) U/L	11 (3-17)	14%
Lai 1998	Lamivudine	Not LAM treated for the last 6 months- no further Information about previous IFN or nucleoside use	1.80 (0.54) log10 copies/ml	1.5 (0-15) x ULN*	-	5% in the sample
	Placebo		185 (0.63) log10copies/ml	1.5 (0-10) x ULN*	-	-
Chang 2006	Entecavir	99% HBeAg+, 16% previously treated with IFN or LAM	9.62 (2.01) log10 copies/ml	140.5 (114.3) IU/L	-	8%
	lamivudine		9.69 (1.99) log10 copies/ml	146.3 (132.3) IU/L	-	8%
Yao 2007	entecavir	Nucleos(t)ide analogue naïve	8.77 (0.86) log10 copies/ml	191 (135) U/L	-	-
	lamivudine		8.65 (1.0) log10 copies/ml	204 (192) U/L	-	-
Ren 2007	entecavir	Nucleos(t)ide analogue naive	8.52 (1.02) log10 copies/ml	211.2 (144.7) U/L	-	-
	lamivudine		8.49 (1.10) log10 copies/ml	201.6 (178.2) U/L	-	-
Chan 2007	telbivudine	Nucleos(t)ide analogue naïve	9.57 (0.26) log10 copies/ml	133 (47-750) U/L	-	-
	Adefovir		9.98 (0.23) log10 copies/ml	144 (43-854) U/L	-	-
	ADV (24W)-telbivudine (28w)		9.47 (0.29) log10 copies/ml	110 (50-455) U/L	-	-

Study	Comparators	Patients' characteristics	Baseline HBV DNA levels (mean (SD))	Baseline ALT levels (mean (SD)/median (range))	HAI (median (range))	Cirrhosis (%)
Hou 2008A	telbivudine	Nucleos(t)ide analogue naïve, possible prior IFN longer than 12 months ago	9.7 (9-10.1) log10 copies/ml	156 (SE 9.6)	-	-
	lamivudine		9.7 (9-10.1) log10 copies/ml	157 (SE 12.6)	-	-
Liaw 2009	telbivudine	Nucleos(t)ide analogue naïve	9.5 (0.1) log10 copies/ml	146.2 (SE 5.4) IU/L	-	-
	lamivudine		9.5 (0.1) log10 copies/ml	158.9 (SE 6.3) IU/L	-	-
Lai 2007	telbivudine	Nucleos(t)ide analogue naïve	9.5 (0.09) log10 copies/ml	146.4 (5.37) IU/L	-	-
	lamivudine		9.5 (0.09) log10 copies/ml	158.9 (6.30) IU/L	-	-
Lai 2005	telbivudine	Nucleos(t)ide analogue naïve	8.9 (6.3-13.3) log10 copies/ml	130 (35-400) U/L	-	-
	lamivudine		9.3 (6.6-12.9) log10 copies/ml	122 (62-309) U/L	-	-
	telbivudine+LAM		9.5 (5.9-13.2) log10 copies/ml	142 (32-1657) U/L	-	-
Marcellin 2008	tenofovir	4.5% previously treated patients with NUCs	8.64 (1.08) log10 copies/ml	142.1 (102.81) IU/L		-
	Adefovir		8.88 (0.93) log10 copies/ml	155.2 (121.49) IU/L	-	-
Leung 2009	entecavir	Nucleoside naïve	10.26 (SE0.35) log10 copies/ml	110.6 (SE14.6)U/L	-	-
	Adefovir		9.88 (SE0.22) log10 copies/ml	172.3 (SE37)U/L	-	-
Cindoruk 2002	IFN+ LAM	Treatment naïve	no info	121 (69) IU/L	-	0
	IFN		no info	142 (83) IU/L	-	0
Ayaz 2006	IFN a-2a+ LAM	Treatment naïve	3142 (47-4213) pg/dl=31.4pg/ml=171 log10 copies/ml	124 (59) IU/L	8.2 (6-10)	-
	IFN		2912 (65-4112) pg/dl=29.1pg/ml=158.6 log10 copies/ml	128 (57) IU/L	7.7 (6-10)	-
Yalcin 2003	IFN a-2b+ LAM	Treatment naïve	3.38 (0.44) log10 copies/ml	163.2 (79.86) IU/L	8 (4-14)	0
	IFN		3.11 (0.77) log10 copies/ml	143.6 (54.07) IU/L	9.5 (4-13)	0
Jang 2004	IFN+ LAM	Treatment naïve	2.4 (0.7) pg/ml=13.08 (3.8) log10 copies/ml	242 (175) IU/L	-	-

Study	Comparators	Patients' characteristics	Baseline HBV DNA levels (mean (SD))	Baseline ALT levels (mean (SD)/median (range))	HAI (median (range))	Cirrhosis (%)
	LAM		2.3 (0.7) pg/ml=12.54 (3.8) log10 copies/ml	263 (183) IU/L	-	-
Yuki 2008	IFN+ LAM->LAM	Mixed population; majority HBeAg (67%) /13% previously treated with IFN	7.5 (3.0->7.6) log10 copies/ml	90 (25-1125) IU/L	-	-
	LAM		7.0 (3.9->7.6) log10 copies/ml	76 (30-1545) IU/L	-	-
Barbaro 2001	IFNa-2b+ LAM (24w)	Nucleoside naïve/some non responders to previous IFN treatment	166 (10-876) pg/ml=904.7 log10 copies/ml	170 (76-415) UI/U	11 (5-13)	-
	LAM (52w)		161 (15-653) pg/ml=877.5 log10 copies/ml	165 (65-398) UI/U	11 (7-12)	-
Sung 2008	ADV + LAM	Nucleos(t)ide naïve	8.87 (6.5-11.0) log10 copies/ml	23% had >5 x ULN*	-	-
	LAM		9.17 (4.4-11.1) log10 copies/ml	30% had >5 x ULN*	-	-

**ULN not specified by the authors*

Table 70: Study data for the network of the frequency of nucleos(t)ide naïve adults with HBeAg positive CHB infection achieving undetectable HBV DNA (<300 copies/ml) at the end of 12 months of treatment

Study	HBV DNA threshold	Comparator1	Comparator2	Comparator3	Comparator1			Comparator2			Comparator3		
					N*	N~	NR	N*	N~	NR	N*	N~	NR
Lau 2005	400 copies/ml	LAM	Peg 2a	Peg 2a+ LAM	108	104	230	68	64	243	186	182	246
Schalm 2000	8 x10^6 copies/ml	LAM	IFN	LAM -> LAM + IFN	48	11	68	19	0	60	25	0	62
Chang 2006	300 copies/ml	LAM	ETV	NA	129	-	321	236	-	340	NA		
Yao 2008	300 copies/ml	LAM	ETV	NA	83	-	221	116	-	225	NA		
Ren 2007	300 copies/ml	LAM	ETV	NA	8	-	20	15	-	21	NA		
Hou 2008A	300 copies/ml	LAM	TBL	NA	54	-	143	98	-	147	NA		
Lai 2007	300 copies/ml	LAM	TBL	NA	187	-	463	275	-	458	NA		
Lai 2005	200 copies/ml	LAM	TBL	TBL+ LAM	6	6	19	27	28	44	20	21	41
Jang 2004	1 pg/ ml (3x 10^5 copies/ml)	LAM	IFN+ LAM	NA	40	25	40	35	22	35	NA		
Yuki 2008	2.6 log copies/ml (0.52 x 10^5 copies/ml	LAM	IFN+ LAM	NA	19	10	34	20	12	30	NA		
Barbaro 2001	1.6 pg/ml	LAM	IFN+ LAM	NA	23	0	71	28	0	73	NA		
Sung 2008	200 copies/ml	LAM	ADV + LAM	NA	23	24	45	21	22	43	NA		
Dienstag 1999	1.6pg/ml	LAM	PLC	NA	28	3	63	11	0	69	NA		
Lai 1998	1.6pg/ml	LAM	PLC	NA	137	82	139	17	0	69	NA		
Marcellin 2003	400 copies/ml	PLC	ADV	NA	0	0	167	36	33	171	NA		
Cindoruk 2002	No IFNormation	IFN +LAM	IFN	NA	26	-	50	24	-	50	NA		
Ayaz	5pg/ml	IFN+	IFN	NA	28	14	31	22	6	33	NA		

Study	HBV DNA	Comparator1						Comparator2			Comparator3		
2006	(=14.15 x 10^5 copies/ml)	LAM											
Yalcin 2003	1 pg/ ml (2.8x 10^5 copies/ml)	IFN+ LAM	IFN	NA	33	21	33	9	3	15	NA		
Leung 2008	300 copies/ml	ETV	ADV	NA	19	-	33	6	-	32	NA		
Chan 2007	300 copies/ml	ADV	TBL	ADV -->TBL	17	-	42	26	-	43	25	-	46
Marcellin 2008	400 copies/ml	ADV	TDF	NA	12	11	84	133	131	160	NA		

▪ *As reported in the trial, N*; number of events as reported in the trial, N~; number of events after transformation based on the lower limit of HBV detection of 300 copies/ml, NR; number completed the trial, NA, not applicable*

Seventeen studies were included in the network of the proportion of HBeAg positive nucleoside naïve adults with chronic hepatitis B who achieved HBeAg seroconversion at year one (**Table 71**).

Table 71: Study data for the network of the proportion of nucleos(t)ide naïve adults with HBeAg positive CHB infection achieving HBeAg seroconversion at the end of 12 months of treatment

Study	Comparator1	Comparator 2	Comparator 3	Comparator1		Comparator 2		Comparator 3	
				N	NR	N	NR	N	NR
Marcellin 2003	Placebo	Adefovir	NA	9	161	20	171	NA	NA
Lau 2005	Lamivudine	Peg IFN 2a	Peg IFN 2a plus LAM	55	230	72	243	64	246
Schalm 2000	Lamivudine	Interferon	LAM to LAM plus IFN	14	68	12	60	20	62
Dienstag 1999	Lamivudine	Placebo	NA	11	63	4	69	NA	NA
Chang 2006	Lamivudine	Entecavir	NA	64	321	74	340	NA	NA
Yao 2008	Lamivudine	Entecavir	NA	39	221	33	225	NA	NA
Ren 2007	Lamivudine	Entecavir	NA	4	20	3	21	NA	NA
Chan 2007	Adefovir	Telbivudine	Adefovir to telbivudine	8	42	12	43	11	46
Hou 2008A	Lamivudine	Telbivudine	NA	26	143	36	147	NA	NA
Lai 2007	Lamivudine	Telbivudine	NA	100	463	103	458	NA	NA
Lai 2005	Lamivudine	Telbivudine	Telbivudine plus LAM	4	19	14	44	6	41
Marcellin 2008	Adefovir	Tenofovir	NA	14	80	32	153	NA	NA
Leung 2008	Entecavir	Adefovir	NA	5	33	7	32	NA	NA

Study	Comparator1	Comparator 2	Comparator 3	Comparator1		Comparator 2		Comparator 3	
Ayaz 2006	Interferon	IFN plus LAM	NA	4	31	4	33	NA	NA
Yalcin 2003	Interferon	IFN plus LAM	NA	7	15	22	33	NA	NA
Yuki 2008	Lamivudine	IFN plus LAM	NA	2	34	6	30	NA	NA
Sung 2008	Lamivudine	ADV plus LAM	NA	9	45	5	43	NA	NA

N; number of events, NR; number randomised, NA, not applicable

J.3.1.1 Network 1: proportion of nucleos(t)ide naïve adults achieving undetectable HBV DNA (<300 copies/ml) at the end of 12 months of antiviral treatment

Both fixed and random effects models were fitted. Table 8 presents results of between-study heterogeneity for the random effect model and goodness of fitness of the two models. DIC suggested that there was more than a 5 point difference between the two models. In addition, the residual deviance showed that the random effects model fitted the data better than the fixed effects model as the residual deviance (47.67 vs. 59.12) was closer to the number of unconstrained data points, 46. Therefore, the results of the random effects model are presented for this network.

Table 72: Measures of fitness of fixed (FE) and random (RE) effects models for the first network

	FE model	RE model
Measure of between study heterogeneity		
• Standard deviation on the log ORs scale (SD) ^	-	0.49
Measure of goodness-of-fit		
• Residual Deviance (r)*	59.12	47.67
• Deviance information criteria (DIC)	283.85	278.40

FE model: fixed effect model, RE model: random effect model,^ Values of SD from 0.1 to 0.5 are reasonable, from 0.5 to 1.0 are considered fairly high and greater than 1.0 represent extreme heterogeneity.
** Compared to 46 data points*

In addition, we investigated the effect of between study heterogeneity in the results of the random effects model (SD of the log ORs scale=0.49). This was explored by comparing the size of effect for each treatment to the extent of between studies variation. Table 9 shows the results of predicting the confidence intervals of the outcome (undetectable HBV DNA <300 copies/mL) of a future trial of infinite size taking into account between trials variation, and comparing with the confidence intervals of the log ORs based on the sampling error (within study variation) only. The results suggested that the confidence intervals of comparable magnitude, for all the interventions except for entecavir, telbivudine and pegylated interferon plus lamivudine combination therapy. In general, the confidence intervals were not substantially widened by including between study variance and heterogeneity was not a problem in this network.

Table 73: Investigation of between study heterogeneity for the results of the random effects model for the outcome of undetectable HBV DNA (<300 copies/mL)

Treatment	Mean Log OR (SD)	Between study heterogeneity	Predictive SD	95% CI based on sampling error		95% CI based on a future very large trial	
Placebo	-4.01 (0.75)	0.49	0.90	-5.48	-2.53	-5.76	-2.25
IFN plus LAM	-0.07 (0.46)	0.49	0.67	-0.97	0.83	-1.39	1.25
Entecavir	1.08 (0.35)	0.49	0.60	0.39	1.77	-0.10	2.26
Adefovir	-0.22 (0.55)	0.49	0.74	-1.29	0.86	-1.66	1.23
Interferon	-1.26 (0.57)	0.49	0.75	-2.38	-0.15	-2.74	0.21
Telbivudine	0.96 (0.34)	0.49	0.60	0.29	1.64	-0.21	2.14
Tenofovir	3.24 (0.87)	0.49	1.00	1.54	4.94	1.28	5.19
Peg IFN 2a	-0.84 (0.59)	0.49	0.77	-2.00	0.32	-2.34	0.66
Peg IFN 2a plus LAM	1.25 (0.60)	0.49	0.77	0.08	2.42	-0.27	2.76
Telbivudine plus LAM	0.59 (0.67)	0.49	0.83	-0.73	1.90	-1.04	2.22
Adefovir plus LAM	-0.08 (0.70)	0.49	0.86	-1.46	1.29	-1.76	1.59
LAM to LAM plus IFN	-2.74 (1.42)	0.49	1.50	-5.52	0.04	-5.68	0.20
Adefovir to telbivudine	0.53 (0.71)	0.49	0.86	-0.86	1.93	-1.16	2.23

<Insert Note here>

Table 3 presents the results of the conventional pair-wise meta-analyses (head to head comparisons) (white area), together with the results computed by the NMA for every possible treatment comparison (grey area). Both results are presented as odds ratios (95% c.i). As previously mentioned, these results were derived from the random effects model.
All antiviral treatments, including monotherapies, combinations and sequential treatments, were found to be significantly better than placebo (Figure 3). In addition, entecavir, telbivudine, tenofovir were significantly more effective than lamivudine in achieving undetectable HBV DNA (<300 copies/ml) at 1 year of treatment. Tenofovir was significantly more effective in achieving this outcome compared to all the other comparisons included in the network except when compared to pegylated interferon alpha plus lamivudine combination therapy, however the width of the confidence intervals of the ORs were very wide, thus results should be interpreted with caution in terms of their precision. Pegylated interferon alpha plus lamivudine combination therapy was only significantly more effective for achieving that outcome when compared to interferon or pegylated interferon alpha.
No inconsistency was found between the results of the pair-wise and network meta-analyses.
In this analysis, tenofovir was found to have the highest probability (95.9%) of being the best treatment to achieve undetectable HBV DNA (<300 copies/ml) at the end of 1 year of treatment followed by pegylated interferon alpha plus lamivudine combination therapy (2.4%) (Table 7). All the other antiviral treatments were ranked very low, i.e. low probability of being the best at achieving this outcome.

Figure 19: Odds ratios (95% C.I) from conventional (white area) and network meta-analysis (grey area) for the proportion of nucleoside naïve people achieving undetectable HBV DNA (<300 copies/ml) at the end of 12 months of antiviral treatment

Lamivudine	**0.07 (0.04-0.12)**	1.58 (0.57-4.37)/1.30 (0.65-2.58)/	**2.61 (2.06-3.32)**		**0.19 (0.09-0.41)**	**2.46 (1.97-3.09)**		1.44 (0.97-2.17)	**3.50 (2.37-5.17)**	2.06 (0.66-6.48)	0.61 (0.26-1.45)	**0.28 (0.14-0.58)**	
0.02 (0.00-0.07)	**Placebo**			90.24 (5.49-1483)									
0.9 (0.37-2.27)	**50.19 (9.57-306.1)**	**IFN plus LAM**			0.93 (0.42-2.04)/ 0.18 (0.04-0.71)/ 0.02 (0.00-0.45)								
2.87 (1.52-6.35)	**156.1 (36.56-869.5)**	**3.09 (1.06-10.6)**	**Entecavir**	0.17 (0.06 - 0.52)									
0.79 (0.28-2.50)	**42.69 (9.87-236.5)**	0.85 (0.21-3.80)	0.27 (0.09-0.82)	**Adefovir**		2.25 (0.94-5.36)	**29.56 (14.13 - 61.82)**						1.72 (0.75-3.96)
0.29 (0.08-0.81)	**15.45 (2.29-99.72)**	**0.31 (0.12-0.66)**	**0.10 (0.02-0.32)**	0.37 (0.06-1.53)	**Interferon**							1.46 (0.69-3.07)	
2.59 (1.33-5.47)	**138.8 (31.9-767.3)**	2.77 (0.92-9.16)	0.90 (0.34-2.25)	**3.26 (1.1-9.57)**	**8.9 (2.7-39.1)**	**Telbivudine**				0.60 (0.25-1.42)			0.79 (0.35-1.82)
25.08 (4.67-152.7)	**1365 (187-11860)**	**26.6 (4.03-207)**	**8.70 (1.53-49.9)**	**31.35 (8.25-123.9)**	**86.1 (12.8-825.8)**	**9.7 (1.76-55.5)**	**Tenofovir**						
0.44 (0.13-1.43)	**23.47 (3.54-167.6)**	0.46 (0.10-2.11)	**0.15 (0.03-0.56)**	0.54 (0.10-2.65)	1.48 (0.32-8.87)	**0.17 (0.04-0.65)**	**0.02 (0.00-0.14)**	**Peg 2a**	**7.98 (5.33-11.95)**				
3.48 (1.00-11.79)	**188 (28.37-1356)**	3.71 (0.83-17.35)	1.22 (0.27-4.59)	4.39 (0.79-21.4)	**11.94 (2.60-71.04)**	1.35 (0.31-5.24)	0.14 (0.01-1.09)	**8.08 (2.39-27.1)**	**Peg 2a + LAM**				
1.78 (0.49-7.25)	**95.73 (14.6-761.2)**	1.9 (0.41-10.18)	0.61 (0.14-2.76)	2.24 (0.43-11.85)	**6.13 (1.23-42.3)**	0.68 (0.19-2.57)	**0.07 (0.00-0.60)**	4.08 (0.72-26.8)	0.50 (0.08-3.37)	**Telbivudine + LAM**			
0.93 (0.22-3.75)	**50.0 (6.66-404.5)**	0.98 (0.19-5.36)	0.32 (0.06-1.50)	1.15 (0.19-6.49)	3.15. (0.58-21.4)	0.36 (0.07-1.65)	**0.04 (0.00-0.32)**	2.12 (0.33-13.7)	0.27 (0.08-1.73)	0.52 (0.07-3.42)	**Adefovir + LAM**		
0.08 (0.00-0.65)	4.01 (0.10-60.89)	**0.08 (0.00-0.79)**	**0.03 (0.00-0.25)**	0.10 (0.00-1.08)	0.27 (0.00-2.81)	**0.03 (0.00-0.28)**	**0.00 (0.00-0.05)**	0.17 (0.00-2.12)	**0.02 (0.00-0.26)**	**0.04 (0.00-0.52)**	0.08 (0.00-1.19)	**LAM -> LAM + IFN**	

1.69 (0.42-7.27)	**91.1 (14.3-691)**	1.81 (0.35-10.3)	0.59 (0.12-2.56)	2.11 (0.56-8.05)	**5.84 (1.09-42.2)**	0.65 (0.17-2.50)	**0.06 (0.00-0.45)**	**1.1** 3.90 (0.62-26.9)	0.49 (0.07-3.38)	0.96 (0.15-5.95)	1.82 (0.26-13.97)	**22.6 (1.65-949.5)**	**Adefovir -> telbivudine**

Results in the white area are the ORs and 95% confidence intervals from the conventional meta-analyses of direct evidence between the column-defined treatment compared to the row-defined treatment. ORs greater than 1 favour the column-defined treatment.
Results in grey are the median ORs and 95% credible intervals from the fixed effect model of the NMA of direct and indirect evidence between the row-defined treatment compared to the column-defined treatment. ORs greater than 1 favour the row-defined treatment.
Numbers in bold denote statistically significant results (95% CI credible intervals do not include 1)

Table 74: Probabilities of being the best treatment for achieving undetectable HBV DNA (<300 copies/ml) and the median proportion (95% c.i) with undetectable HBV DNA at 12 months among nucleos(t)ide navie adults with HBeAg positive CHB infection

Treatment	Probability of being the best treatment for achieving undetectable HBV DNA (<300 copies/ml)	Proportion of adults with undetectable HBV DNA (median, 95% credible intervals)
Tenofovir	95.9%	94.1% (74.7, 98.9)
Peg IFN 2a plus LAM	2.4%	68.8% (38.9, 88.1)
Entecavir	0.6%	64.5% (49.1, 80.5)
Telbivudine	0.2%	62.1% (45.7, .77.5)
Telbivudine plus LAM	0.6%	52.8% (23.7, 82.1)
Adefovir to telbivudine	0.3%	51.6% (20.1, 82.1)
IFN plus LAM	0%	37.3% (18.9, 58.9)
Adefovir	0%	33.4% (14.8, 61.2)
Adefovir plus LAM	0%	36.9 % (12.3, 70.3)
Peg IFN 2a	0%	21.5% (7.4, 47.4)
Interferon	0%	15.5% (5.05, 33.8)
LAM to LAM plus IFN	0%	4.6% (0.2, 29.1)
Placebo	0%	0.12% (0.2, 4.5)
Lamivudine	0%	38.7%

Results from a fixed effect model.

Figure 20: Median rank order for treatments based on the outcome of undetectable HBV DNA<300 copies/ml at the end of 12 months of treatment

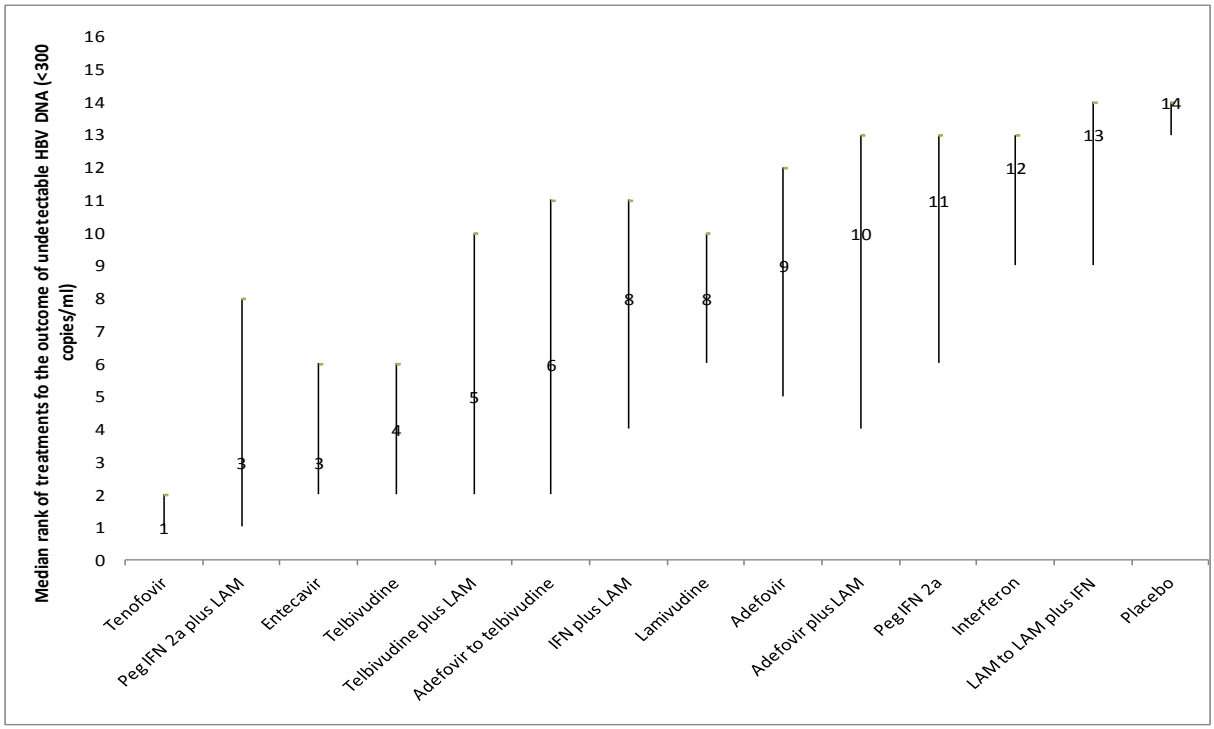

Figure 20 shows the rank of each intervention. The rank is based on the log odds ratio compared to baseline and indicates the median ranking of being the best treatment, second best, third best and so on among the 14 different interventions being evaluated.

- **Network 2: proportion of nucleos(t)ide naïve adults achieving HBeAg seroconversion at the end of 12 months of antiviral treatment**

Both fixed and random effects models were fitted. There was no difference in the residual deviance for both models (35.7 and 35.3, respectively) and they were close to the number of unconstrained data points, 38.

As there was no significant difference in the goodness-of-fitness of models as demonstrated by DICs, the results of the fixed effects model are presented below (Table 10). Table 75: Measures of fitness of fixed (FE) and random (RE) effects models for the second network

	FE model	RE model
Measure of between study heterogeneity		
• Standard deviation on the log ORs scale (SD) ^	-	0.22
Measure of goodness-of-fit		
• Residual Deviance (r)*	35.7	35.3
• Deviance information criteria (DIC)	227.26	228.65

FE model: fixed effect model, RE model: random effect model,^ Values of SD from 0.1 to 0.5 are reasonable, from 0.5 to 1.0 are considered fairly high and greater than 1.0 represent extreme heterogeneity.
** Compared to 38 data points*

Figure 6 summarises the results of the conventional pair-wise meta-analyses (head to head comparisons) (white area), together with the results computed by the NMA (from a fixed effects model) for every possible treatment comparison (grey area).

This analysis found no significant differences between the antiviral treatments in the network in the outcome of HBeAg seroconversion. Adefovir, telbivudine, interferon plus lamivudine, pegylated interferon 2a, pegylated interferon 2a plus lamivudine combination therapy and lamivudine monotherapy to lamivudine plus interferon combination therapy were significantly superior to placebo. Interferon plus lamivudine combination therapy had the highest probability of achieving HBeAg seroconversion (50.3%), followed by lamivudine monotherapy to lamivudine plus interferon combination therapy (32.4%) and tenofovir monotherapy(7.1%).

Figure 21: Odds ratios (95% C.I) from conventional (white area) and network meta-analyses (grey area) for the proportion of nucleoside naïve people achieving HBeAg seroconversion at the end of 12 months of antiviral treatment

Lamivudine	**0.29 (0.09-0.97)**	0.98 (0.73-1.32)		1.16 (0.89-1.51)	0.96 (0.41-2.27)	4.00 (0.74-21.58)		1.33 (0.89-2.00)	1.12 (0.74-1.70)	0.64 (0.16-2.61)	0.42 (0.13-1.37)	1.84 (0.83-4.06)	
0.35 (0.15-0.78)	**Placebo**		2.24 (0.99-5.07)										
0.95 (0.71-1.28)	**2.73 (1.19-6.67)**	**Entecavir**	1.56 (0.44-5.56)										
0.88 (0.43-1.81)	**2.52 (1.24-5.33)**	0.92 (0.44-1.93)	**Adefovir**	1.83 (0.67-4.98)			1.25 (0.62-2.50)						1.41 (0.51-3.93)
1.18 (0.91-1.54)	**3.38 (1.50-8.06)**	1.24 (0.84-1.83)	1.34 (0.66-2.76)	**Telbivudine**						0.37 (0.13-1.07)			0.77 (0.30-1.97)
1.20 (0.52-2.56)	**3.30 (1.07-10.67)**	1.21 (0.52-2.81)	1.31 (0.45-3.87)	0.98 (0.43-2.27)	**Interferon**	1.65 (0.64-4.26)						1.90 (0.83-4.35)	
2.29 (0.85-6.41)	**6.58 (1.82-25.77)**	2.41 (0.85-7.08)	2.61 (0.76-9.3)	1.94 (0.69-5.68)	1.99 (0.85-4.80)	**IFN + LAM**							
1.11 (0.41-3.13)	**3.21 (1.18-9.07)**	1.17 (0.42-3.33)	1.27 (0.64-2.63)	0.95 (0.35-2.64)	0.97 (0.27-3.58)	0.49 (0.11-2.04)	**Tenofovir**						
1.34 (0.90-2.04)	**3.87 (1.56-10.0)**	1.42 (0.86-2.35)	1.54 (0.67-3.53)	1.14 (0.70-1.87)	1.17 (0.48-2.88)	0.59 (0.19-1.74)	1.21 (0.40-3.60)	**Peg IFN 2a**	0.84 (0.56-1.24)				
1.12 (0.74-1.71)	**3.23 (1.30-8.33)**	1.18 (0.71-1.97)	1.28 (0.56-2.98)	0.95 (0.58-1.57)	0.97 (0.40-2.40)	0.49 (0.16-146)	1.01 (0.33-3.03)	0.83 (0.56-1.24)	**Peg IFN 2a + LAM**				
0.46 (0.15-1.29)	1.34 (0.33-4.95)	0.49 (0.15-1.41)	0.53 (0.14-1.79)	0.40 (0.13-1.08)	0.40 (0.10-1.48)	**0.20 (0.04-0.85)**	0.42 (0.09-1.72)	0.34 (0.10-1.03)	0.41 (0.13-1.24)	**Telbivudine + LAM**			
0.51 (0.14-1.65)	1.47 (0.32-6.30)	0.54 (0.14-1.80)	0.58 (0.14-2.31)	0.43 (0.12-1.45)	0.44 (0.10-1.85)	0.22 (0.04-1.03)	0.45 (0.09-2.14)	0.38 (0.10-1.31)	0.45 (0.12-1.58)	1.10. (0.21-5.59)	**Adefovir + LAM**		
2.03 (0.93-4.49)	**5.82 (1.88-18.69)**	2.13 (0.92-4.97)	2.31 (0.78-6.78)	1.72 (0.76-3.96)	1.76 (0.80-3.93)	0.88 (0.29-2.61)	1.82 (0.49-6.59)	1.51 (0.61-3.69)	1.81 (0.74-4.40)	4.38 (1.19-17.46)	4.00 (0.97-17.9)	**LAM to LAM + IFN**	
1.04 (0.40-2.63)	3.00 (0.99-9.12)	1.10 (0.41-2.87)	1.19 (0.46-3.00)	0.89 (0.35-2.18)	0.91 (0.26-3.12)	0.46 (0.11-1.77)	0.94 (0.28-2.97)	0.77 (0.27-2.11)	0.93 (0.32-2.57)	2.50 (0.58-9.32)	2.05 (0.45-10.13)	0.52 (0.15-1.74)	**Adefovir to telbivudine**

Results in the white area are the ORs and 95% confidence intervals from the conventional meta-analyses of direct evidence between the column-defined treatment compared to the row-defined treatment. ORs greater than 1 favour the column-defined treatment.
Results in grey are the median ORs and 95% credible intervals from the fixed effect model of the NMA of direct and indirect evidence between the row-defined treatment compared to the column-defined treatment. ORs greater than 1 favour the row-defined treatment.
Numbers in bold denote statistically significant results (95% CI credible intervals do not include

Table 76: Probabilities of being the best treatment for achieving HBeAg seroconversion and the median proportion (95% c.i) with HBeAg seroconversion at 12 months among nucleos(t)ide navie adults with HBeAg positive CHB infection

Treatment	Probability of being the best treatment for achieving HBeAg seroconversion	Proportion of adults with HBeAg seroconversion (median, 95% credible intervals)
IFN plus LAM	50.4%	36.6% (17.6, 61.8)
LAM to LAM plus IFN	32.4%	33.9% (18.9, 53.1)
Tenofovir	7.1%	21.9% (9.3, 44.1)
Adefovir to telbivudine	4.3%	20.1% (9.1, 39.9)
Peg IFN 2a	3.6%	25.3% (18.4, 34.0)
Peg IFN 2a plus LAM	0.5%	22.8% (15.7, 30.2)
Telbivudine	0.3%	22.9% (18.6, 27.9)
Interferon	0.4%	22.5% (11.7, 39.2)
Entecavir	0.1%	19.4% (15.3, 24.4)
Adefovir	0.2%	18.1% (9.8, 31.3)
Telbivudine plus LAM	0.1%	10.5% (3.6, 24.5)
Adefovir plus LAM	0.5%	11.4% (3.5, 29.4)
Placebo	0%	8.1% (3.6, 16.4)
Lamivudine	0%	-

<Insert Note here>

Figure 22: Median rank of treatments for HBeAg seroconversion at the end of 12 months of treatment

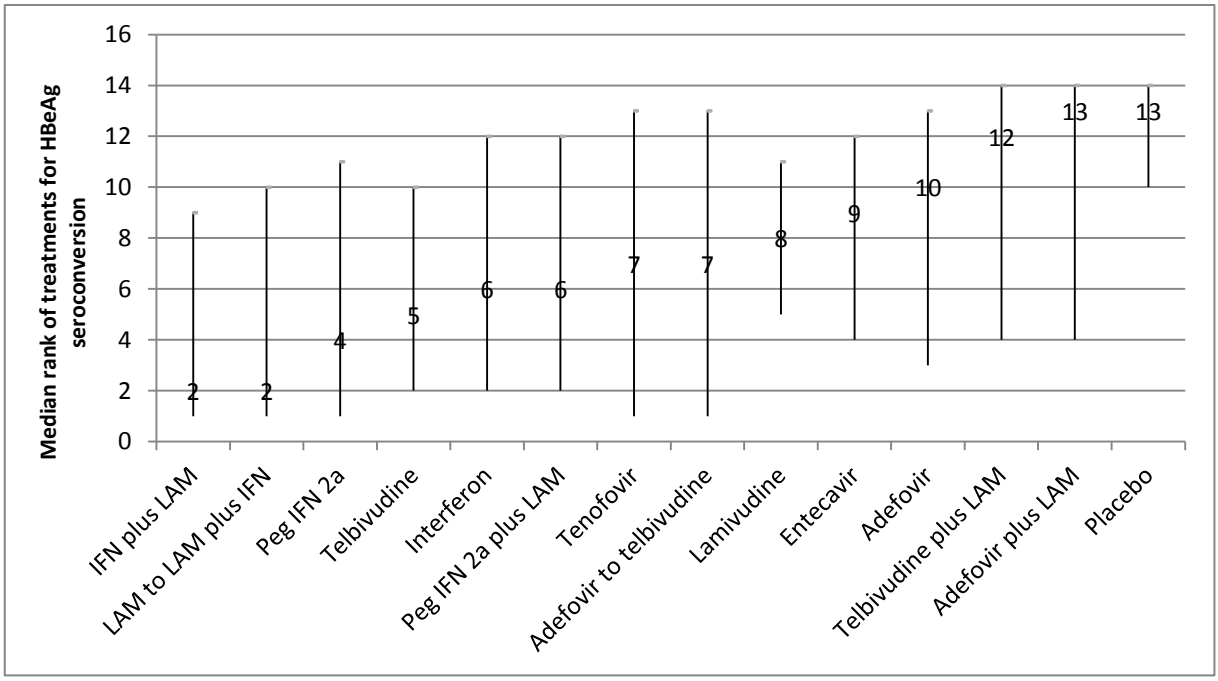

J.3.1.2 Sensitivity analyses for the 1st network

The GDG considered that the effectiveness of antiviral treatments could be significantly influenced by including studies of mixed populations of nucleoside naïve and previously

nucleoside treated people with chronic hepatitis B. In addition, a sensitivity analysis was decided by including only studies with the selected lower detection threshold of HBV DNA (<300 copies/ml). Therefore, two sensitivity analyses were conducted to test the robustness of the results of the 1st and 2nd networks.
Two sensitivity analyses were carried out:

1. Excluding studies with a mixed population profile of nucleoside naïve and previously treated people (not 100% nucleos(t)ide naïve).
2. Excluding studies that used a detection threshold of HBV DNA other than 300 copies/ml (without threshold transformation).

Figures 7 and 8 show the networks for each sensitivity analysis.

Figure 23: Network for the sensitivity analysis of including only studies with 100% nucleoside naïve populations

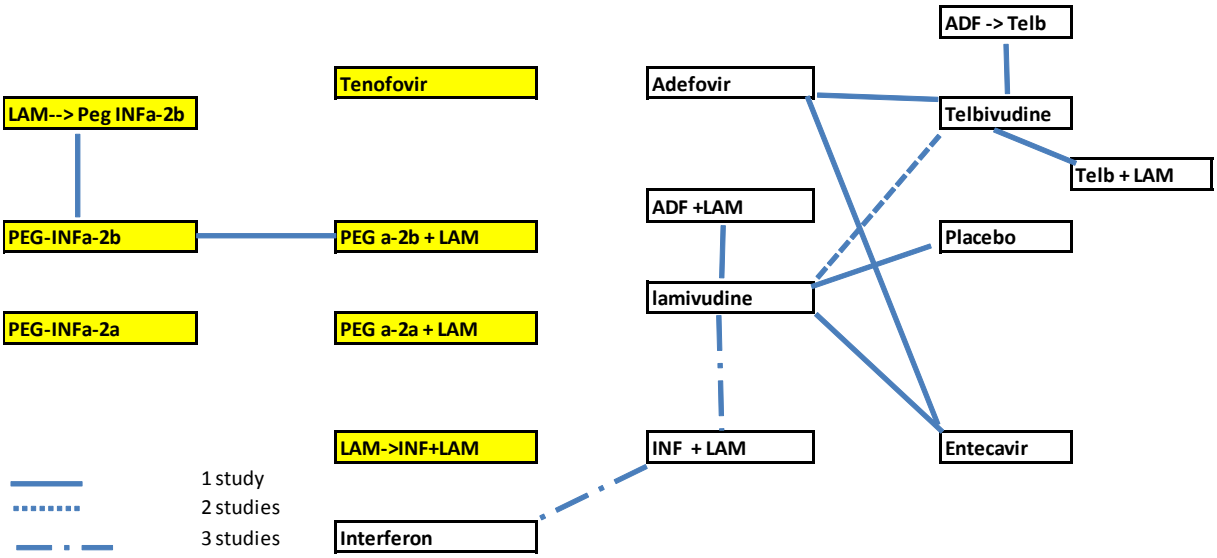

Figure 24: Network for the sensitivity analysis of including only studies using the 300 copies/ml as the lower limit of undetectable HBV DNA

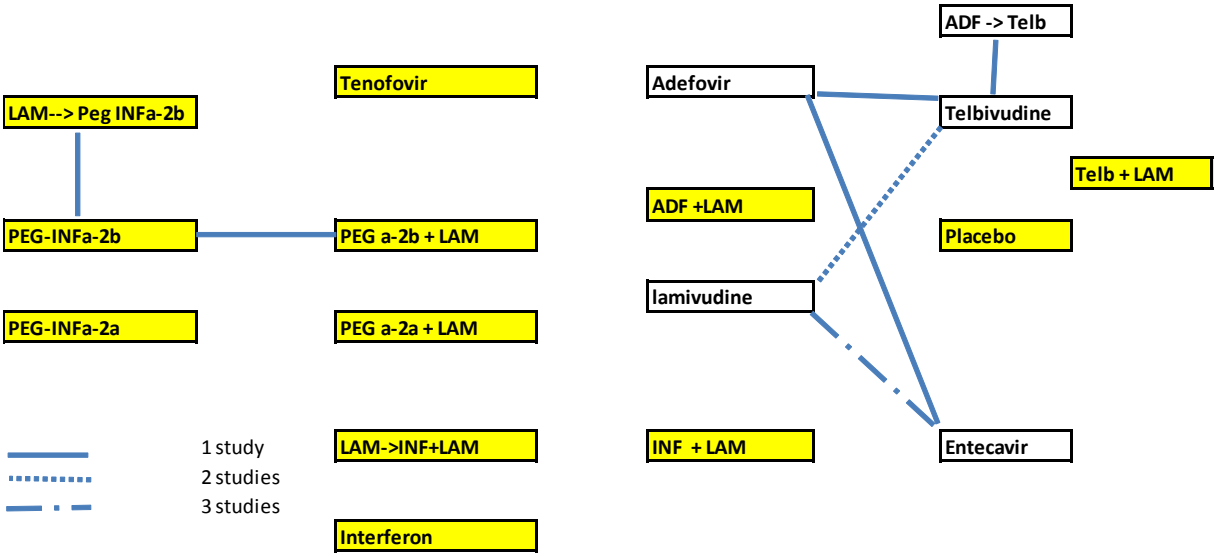

Sensitivity analysis on the network of undetectable HBV DNA by including studies with only nucleoside naïve populations showed that entecavir had the highest probability for achieving undetectable HBV DNA (91.1%), followed by telbivudine in a very lower probability (3.8%) (Table 13). The results of the fixed effects model is presented for the sensitivity analysis as it fitted the data better and there was no major difference in the DICs between the two models (less than 3-5 points).

Table 77: Sensitivity analysis for undetectable HBV DNA (<300 copies/mL) by including only studies with 100% nucleos(t)ide naïve populations

Treatment	Probability of being the best treatment for achieving undetectable HBV DNA (<300 copies/ml) at year 1	Proportion of adults with undetectable HBV DNA (median, 95% c.i)
• Lamivudine	0%	-
• Placebo	0%	2.3% (0.2, 9.06)
• IFN plus LAM	0.2%	40.3% (25.5, 57.3)
• Telbivudine	3.8%	57.6% (52.0, 62.3)
Interferon	0%	22.8% (10.8, 42.0)
Entecavir	91.1%	74.9% (53.3, 88.9)
Adefovir	0%	37.7% (21.3, 56.5)
Telbivudine plus LAM	2.3%	47.9% (28.9, 67.6)
Adefovir plus LAM	0%	33.4% (17.7, 54.1)
Adefovir to telbivudine	2.5%	51.5% (31.1, 71.2)

<Insert Note here>

Another sensitivity analysis was done by limiting to studies using the lowest limit of HBV DNA detection the threshold of 300copies/mL (HBV DNA results have not been transformed) and similar results were found with entecavir being the best treatment to achieve undetectable HBV DNA at year 1 of treatment (57.8%)(Table 14). Results of the random effects model are presented for this analysis.

Table 78: Sensitivity analysis by including only studies using the 300 copies/ml as the lowest limit of HBV DNA detection

Treatment	Probability of being the best treatment for achieving undetectable HBV DNA (<300 copies/ml) at year 1	Proportion of adults with undetectable HBV DNA (median, 95% c.i)
Lamivudine	0.2%	-
Entecavir	57.8%	65% (47.3, 81.9)
Telbivudine	27.5%	61.3% (38.2, 79.5)
Adefovir	0.4%	32.7% (11.4, 64.2)
Adefovir to telbivudine	14.1%	50.6% (16.5, 84.0)

J.3.1.3 Sensitivity analysis for the 2nd network of HBeAg seroconversion among nucleos(t)ide naïve adults with HBeAg positive CHB infection

Figure 25: Network for the sensitivity analysis by including studies with nucleoside naïve populations only

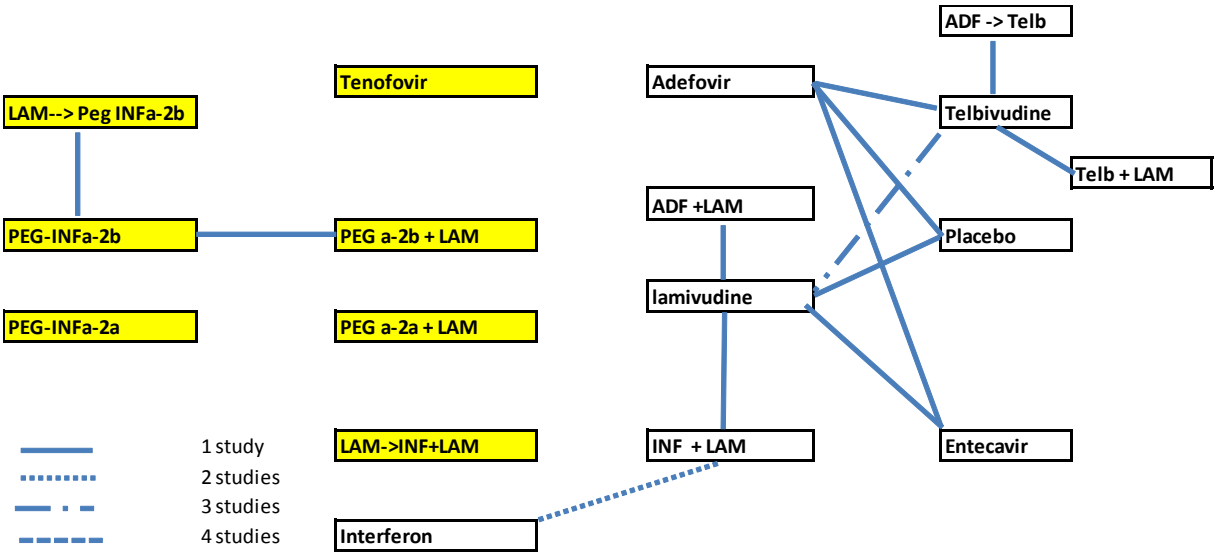

Table 79: Sensitivity analysis for HBeAg seroconversion by including only studies with 100% nucleos(t)ide naïve populations

Treatment	Probability of being the best treatment for achieving HBeAg seroconversion at year 1	Proportion of adults with HBeAg seroconversion (median, 95% c.i)
Lamivudine	0.2%	-
Placebo	0%	6.98% (2.9, 15.0)
Entecavir	0.6%	11.42 (3.8, 28.7)
Adefovir	0.5%	15.2 (7.3, 28.5)
Telbivudine	2.5%	22.3% (18.1, 27.2)
Interferon	15.9%	41.1% (9.2, 87.3)
IFN plus LAM	75.9%	52.7% (18.1, 90.0)
Telbivudine plus LAM	0.2%	10.2% (3.5, 23.8)
Adefovir plus LAM	0.8%	11.2% (3.4, 29.2)
Adefovir to telbivudine	3.3%	19.0% (8.3, 37.3)

Sensitivity analysis on the network of HBeAg seroconversion by including only nucleos(t)ide naïve populations showed that interferon plus lamivudine combination therapy had the highest probability of HBeAg seroconversion (75.9%), followed by interferon (15.9%).

J.3.1.4 Lamivudine resistant adults with HBeAg positive chronic hepatitis B (CHB)

A total of seven trials met the inclusion criteria for the NMA for lamivudine resistant adults with HBeAg positive CHB infection. Figure 10 shows the network for the proportion of people achieving undetectable HBV DNA (<300 copies/ml). The type of line connecting two treatments indicates the number of included studies in which the interventions connected by the line were compared directly. Three studies from the original (direct) evidence review were excluded from the NMA. Table 16 shows the list of excluded studies and reason(s) for exclusion.

Figure 26: Network for the proportion of people achieving undetectable HBV DNA (<300 copies/ml) at the end of 12 months of antiviral treatment

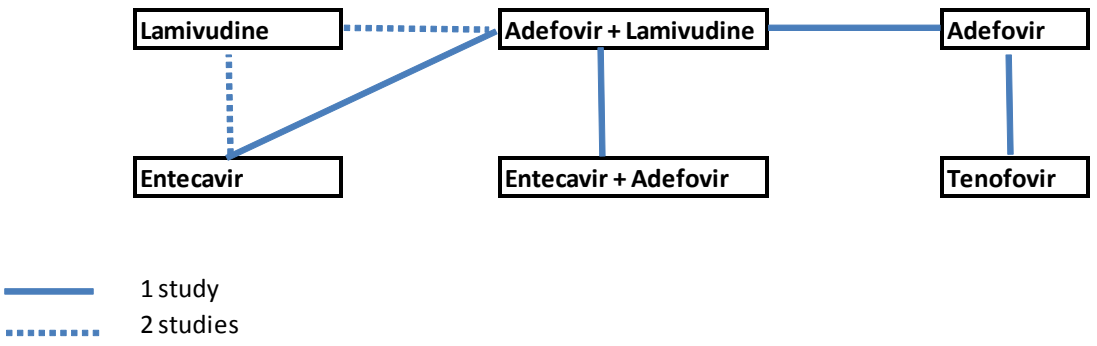

Table 80: Studies from the original (direct comparisons) evidence review which were excluded from the NMA for the 3rd and 4th networks (lamivudine resistant adults with HBeAg positive CHB infection)

Trials excluded	Comparisons	Reason(s) for exclusion
Safadi 2011	Sequential treatment of	Population included with lamivudine

Trials excluded	Comparisons	Reason(s) for exclusion
	lamivudine to telbivudine versus lamivudine	resistance less than 2/3 of the total (15.8%)
Berg 2010	Tenofovir versus emtricitabine plus tenofovir	Outcomes measured at the end of 24 weeks treatment
Yao 2007	Entecavir versus placebo	Population included with lamivudine resistance less than 2/3 of the total (42%)

(a) <Insert Note here>

Four (Peters 2004, Marcellin 2008, Chang 2005, Sherman 2006) out of six included trials were double blinded with appropriate randomization method. Three trials were unblinded (Perrillo 2004, Ryu 2010, Lim 2012), two of which (Perrillo 2001, Ryu 2010) did not provide information on randomisation method and allocation concealment.

Four trials (Perrillo, 2004, Peters, 2004, Ryu 2010, Lim 2012) included only lamivudine resistant populations whereas all studies (with the exception of Marcellin 2008) included a mixed population of HBeAg positive and negative, ranging from 67.8% to 90% HBeAg positive patients.

In the absence of trials on tenofovir in this population, a study by Marcellin (2008) which was based on patients with previous treatment with interferon or nucleoside analogues (unclear lamivudine resistance status), had been included in order to inform the network on the efficacy of tenofovir treatment in the lamivudine resistant network (see NMA protocol for further details). This is based on the assumption that tenofovir would be as efficacious in the lamivudine resistant populations as in the nucleos(t)ide naïve populations, agreed by the GDG. A systematic review of in vivo and in vitro studies was conducted as supplementary material to the NMA (appendix ?), and the summary findings supported this assumption – lamivudine mutant strains (L180M + M204V/I) were fully susceptible to tenofovir compared to wild type (no mutation/ nucleos(t)ide naïve).

There was no difference in the baseline characteristics of included studies in terms of HBV DNA and ALT levels between the treatment arms (Table 13). All studies included patients with baseline HBV DNA levels at the range of 7-10 log10 copies/ml. Only three studies (Sherman, 2006, Ryu 2010, Lim 2012) provided baseline information on the proportion of patients with cirrhosis.

Table 81: Baseline characteristics of included studies in the network of lamivudine resistant adults with HBeAg positive CHB

Study	Comparisons	Population	Baseline HBV DNA levels (mean (SD)/median (range))	Baseline ALT levels (mean (SD)/median (range))	Baseline cirrhosis
Perrillo 2004	ADV + LAM	100% LAM resistant, 88% HBeAg(+), HBV DNA>10^6 copies/ml	8.95 (6.6-10.1) log10 copies/ml	135 (148) IU/L	-
	LAM		8.61 (4.2-10.1) log10 copies/ml	185 (258) IU/L	-
Peters 2004	ADV + LAM	100% LAM resistant, 96.6% HBeAg(+), HBV DNA>10^6 copies/ml	7.94 (5.89-8.88) log10 copies/ml	74 IU/L	-
	LAM		8.20 (6.08-8.82) log10 copies/ml	70 IU/L	-
	ADV		8.42 (7.30-9.21) log10 copies/ml	101 IU/L	-
Chang 2005A	ETV	88.5% LAM resistant, 67.8%HBeAg(+), HBV DNA>10pg/ml	9.07 (1.54) log10 copies/ml	141 (186) U/L	-
	LAM		9.28 (0.82) log10 copies/ml	110 (97) U/L	-
Sherman 2006	ETV	84.6% LAM resistant, 97%HBeAg(+), HBV DNA>3MEq/ml	9.48 (1.81) log10 copies/ml	123.9 (109.7) U/L	10%
	LAM		9.24 (1.56) log10 copies/ml	131.9 (165.1) U/L	6%
Marcellin 2008	Tenofovir	previously treated patients with NUCs (4.5%), 16% previous us of IFN	8.64 (1.08) log10 copies/ml	142.1 (102.81) IU/L	-
	Adefovir		8.88 (0.93) log10 copies/ml	155.2 (121.49) IU/L	-
Ryu 2010	ADV + LAM	100% LAM resistant, 88%HBeAg(+), HBV DNA>10^5 copies/ml	7.61 (5.2-9.5) log10 copies/ml	143(26-1096) IU/L	19.1%
	ETV		7.10 (5.4-9.5) log10 copies/ml	102 (17-677) IU/L	24.4%
Lim 2012	ADV + LAM	100% LAM resistant, 88.9% HBeAg (+), HBV DNA >2,000 IU/mL	4.6 (3.93-5.25) log10 IU/ml	33 (25-47) IU/L	13%
	ETV + ADV		4.4 (3.59-5.18) log10 IU/ml	28 (19-40) IU/L	14%

(a) <Insert Note here>

Table 82: Study data for the network of the frequency of lamivudine resistant adults achieving undetectable HBV DNA (<300 copies/ml) at the end of 12 months of treatment

Study	HBV DNA threshold	Comparator1	Comparator 2	Comparator 3	Comparator1			Comparator2			Comparator3		
					N*	N~	NR	N*	N~	NR	N*	N~	NR
Perrillo 2004	200 copies /ml	ADV + LAM	LAM	NA	9	10	42	0	1	46	NA	NA	NA
Peters 2004	10^3 copies /ml	ADV + LAM	LAM	ADV	7	6	20	0	0	18	5	4	18
Chang 2005A	400 copies /ml	ETV	LAM	NA	11	10	42	2	1	45	NA	NA	NA
Sherman 2006	300 copies /ml	ETV	LAM	NA	27	-	133	2	-	129	NA	NA	NA
Marcellin 2008	400 copies /ml	TDF	ADV	NA	133	131	160	12	11	84	NA	NA	NA
Ryu 2010	300 copies /ml	ADV + LAM	ETV	NA	18	-	47	11	-	45	NA	NA	NA
Lim 2012	300 copies /ml	ADV + LAM	ETV + ADV	NA	2	-	45	13	-	45	NA	NA	NA

N; number of events as reported in the trial, N~; number of events after transformation based on the lower limit of HBV detection of 300 copies/ml, NR; number completed the trial, NA, not applicable*

Table 83: Study data for the network of the frequency of lamivudine resistant adults achieving HBeAg seroconversion at the end of 12 months of treatment

Study	Comparator1	Comparator 2	Comparator 3	Comparator1		Comparator 2		Comparator 3	
				N	NR	N	NR	N	NR
Perrillo 2004	ADV + LAM	LAM	NA	3	40*	1	42*	NA	NA
Peters 2004	ADV + LAM	LAM	ADV	1	18*	0	18	2	18
Chang 2005A	ETV	LAM	NA	1	27*	2	32*	NA	NA
Sherman 2006	ETV	LAM	NA	11	133	4	129	NA	NA
Marcellin 2008	TDF	ADV	NA	32	153	14	80	NA	NA
Ryu 2010	ADV + LAM	ETV	NA	2	39*	1	42*	NA	NA

N; number of events, NR; number randomised, NA, not applicable

** Not all patients were HBeAg positive at the baseline.*

J.3.1.5 Network 3: proportion of lamivudine resistant adults achieving undetectable HBV DNA (<300 copies/ml) at the end of 12 months antiviral treatment

Both fixed and random effects models were fitted for the third network; the statistics presented in Table 20 showed that there was no substantial difference (less than 3-5 points) in the DICs between the two models. There was little difference in the residual deviance for the fixed- and random-effects models, 13.2 and 13.66 respectively, and they were close to the number of unconstrained data points, 15. Therefore, the results of the fixed effects model are presented (Figure 11).

Table 84: Measures of fitness of fixed (FE) and random (RE) effects models for the third network

	FE model	RE model
Measure of between study heterogeneity		
• Standard deviation on the log ORs scale (SD) ^	-	0.67
Measure of goodness-of-fit		
• Residual Deviance (r)*	13.2	13.66
• Deviance information criteria (DIC)	64.71	65.16

FE model: fixed effect model, RE model: random effect model,^ Values of SD from 0.1 to 0.5 are reasonable, from 0.5 to 1.0 are considered fairly high and greater than 1.0 represent extreme heterogeneity.
** Compared to 38 data points*

Figure 11 summarises the results of the conventional pair-wise meta-analyses (head to head comparisons) (white area), together with the results for every possible treatment comparison computed by the NMA (grey area). Both results were presented as odds ratios (95%c.i).

This NMA suggested that all antiviral treatments in the network were significantly better at achieving undetectable HBV DNA (<300 copies/ml) than lamivudine, except for adefovir. In addition, tenofovir was significantly more effective in this outcome compared to adefovir, although the confidence interval of the ORs was very wide and results should be interpreted with caution. Tenofovir had the highest probability of achieving undetectable HBV DNA for lamivudine resistant adults with HBeAg positive CHB (66.2%) followed by entecavir plus adefovir combination therapy (33.8%).

Figure 27: Odds ratios (95% C.I) from conventional (white area) and network meta-analyses (grey area) (fixed model) for the proportion of lamivudine resistant people achieving undetectable HBV DNA (<300 copies/ml) at the end of 12 months of antiviral treatment

Lamivudine	**14.90 (2.68, 82.76)**	**15.42 (4.64, 51.19)**			
20.3 (4.34-113.7)	LAM + ADV	0.52 (0.21, 1.28)	0.66 (0.15, 2.86)		**8.73 (1.84, 41.46)**
13.1 (3.41-65.91)	0.65 (0.14-3.47)	Entecavir			
11.3 (0.97-131.6)	0.55 (0.06-4.86)	0.85 (0.06-10.07)	Adefovir	**29.98 (14.15, 63.51)**	
358.5 (15.88-7711)	17.6 (0.89-313.9)	27.1 (0.98-599.7)	**31.3 (4.44-228)**	Tenofovir	
217.4 (13.93-4660)	**10.26 (1.09-149.3)**	16.4 (0.93-323.9)	19.1 (0.79-643.5)	0.6 (0.01-31.2)	ETV + ADV

Table 85: Probabilities of being the best treatment for achieving undetectable HBV DNA (<300 copies/ml) and the median proportion (95% c.i) with undetectable HBV DNA at year 1 among lamivudine resistant adults with HBeAg positive CHB infection

Treatment	Probability of being the best treatment for achieving undetectable HBV DNA (<300 copies/ml) at year 1	Proportion of lamivudine resistant adults with undetectable HBV DNA (<300 copies/ml) at year 1 (median, 95% credible intervals)
Tenofovir	66.2%	89% (51.8, 98.2)
ETV plus ADV	33.8%	82.4% (42.8, 98.0)
LAM plus ADV	0%	31.3% (13.4, 60.8)
Entecavir	0%	21.4% (10.0, 44.6)
Adefovir	0%	20.3% (3.7, 60.3
Lamivudine	0%	-

(a) <Insert Note here>

Figure 28: Median rank of treatments for undetectable HBV DNA (<300 copies/ml) at the end of 12 months of treatment

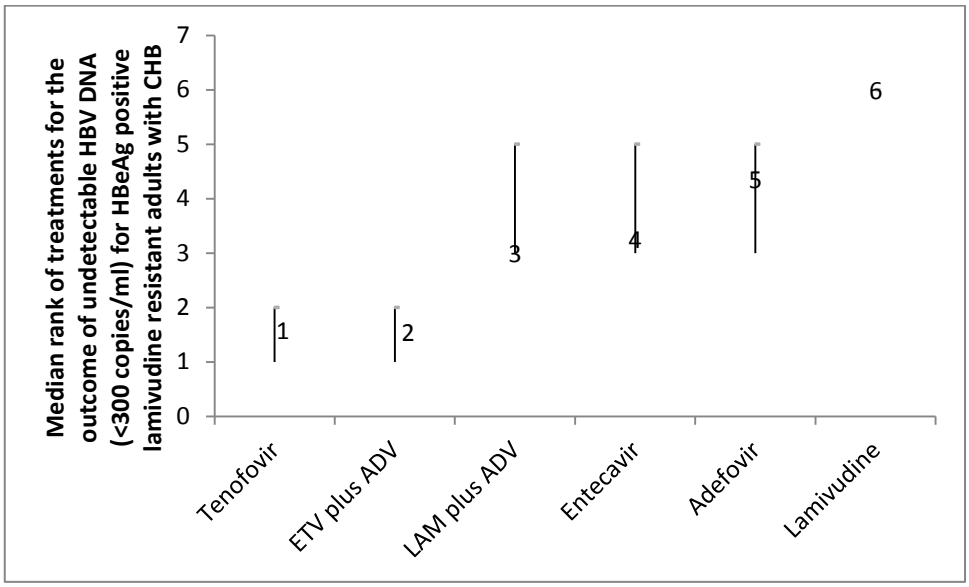

J.3.1.6 Sensitivity analysis for the 3rd network of undetectable HBV DNA among lamivudine resistant adults with HBeAg positive CHB infection

No sensitivity analysis could be performed for the network of undetectable HBV DNA for the lamivudine resistant group as all included studies used mixed populations of HBeAg positive and negative people with CHB and only three trials have used the threshold of 300 copies/ml as the lowest limit of HBV DNA level detection (Ryu 2010, Sherman 2006, Lim 2012) (Table 17).

J.3.1.7 Network 4: proportion of people achieving HBeAg seroconversion at the end of 12 months of antiviral treatment

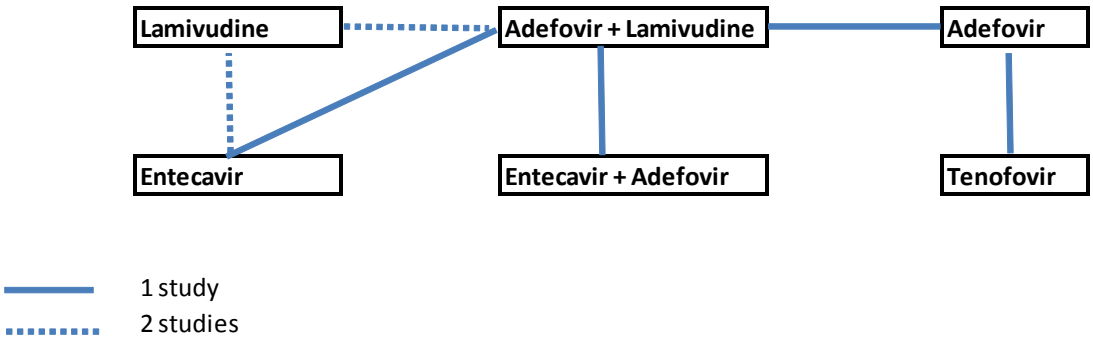

Table 22 shows between-study heterogeneity statistics for the random effects model and goodness-of-fit for both fixed and random effects models; there was no difference in the residual deviance for both models and they were close to the number of unconstrained data points, 15. Therefore, results of fixed effects model are presented.

Table 86: Measures of fitness of fixed (FE) and random (RE) effects models for the fourth network

	FE model	RE model
Measure of between study heterogeneity		

	FE model	RE model
• Standard deviation on the log ORs scale (SD) ^	-	0.84
Measure of goodness-of-fit		
• Residual Deviance (r)*	14.69	14.63
• Deviance information criteria (DIC)	55.74	55.68

<Insert Note here>

Figure 13 summarises the results of the conventional (pair-wise) meta-analyses (head to head comparisons) (white area), together with the results of the fixed effects model computed by the NMA for every possible treatment comparison (grey area). Both results were presented as ORs (95% c.i).

This NMA found no significant differences between the antiviral treatments in the network for HBeAg seroconversion. Tenofovir had the highest probability of achieving HBeAg seroconversion (39.8%), followed by entecavir plus adefovir combination therapy (31.2%), lamivudine plus adefovir combination therapy (11%) and adefovir (10.9%). Figure 14 presents the median rank (95% c.i.) of antiviral treatments and there is a lack of precision on the ranking of treatments in terms of achieving this outcome.

Figure 29: Odds ratios (95% C.I) from conventional (white area) and network meta-analyses (grey area) for the proportion of lamivudine resistant people achieving HBeAg seroconversion at the end of 12 months of antiviral treatment

Lamivudine	3.27 (0.50, 21.54)	2.10 (0.76, 5.76)			
2.99 (0.69-16.12)	LAM + ADV	0.45 (0.04, 5.26)	2.13 (0.17, 25)		1.00 (0.06-16.48)
1.99 (0.78-5.51)	0.66 (0.12-3.20)	Entecavir			
4.53 (0.34-58.41)	1.47 (0.13-15.55)	2.26 (0.15-31.26)	Adefovir	1.25 (0.62, 2.50)	
5.73 (0.39-79.65)	1.86 (0.15-21.63)	2.88 (0.17-42.85)	1.26 (0.64-2.62)	Tenofovir	
3.07 (0.06-159.7)	1.00 (0.03-37.70)	1.53 (0.03-81.9)	0.69 (0.01-52.78)	0.53 (0.01-43.59)	ETV + ADV

Table 87: Probabilities of being the best treatment for achieving HBeAg seroconversion and the median proportion (95% c.i) with HBeAg seroconversion at year 1 among lamivudine resistant adults with HBeAg positive CHB infection

Treatment	Probability of being the best treatment for achieving HBeAg seroconversion at year 1	Proportion of lamivudine resistant adults with HBeAg seroconversion at year 1 (median, 95% c.i)
Tenofovir	39.8%	17.6 (1.4-74.9)
ETV plus ADV	31.2%	10.3 (0.2-85.7)
LAM plus ADV	11.0%	10.0 (2.5-37.6)
Adefovir	10.9%	14.5 (1.3-68.6)
Entecavir	7.0%	6.9 (2.8-17.1)
Lamivudine	0%	-

Figure 30: Median rank of treatments for HBeAg seroconversion at the end of 12 months of treatment

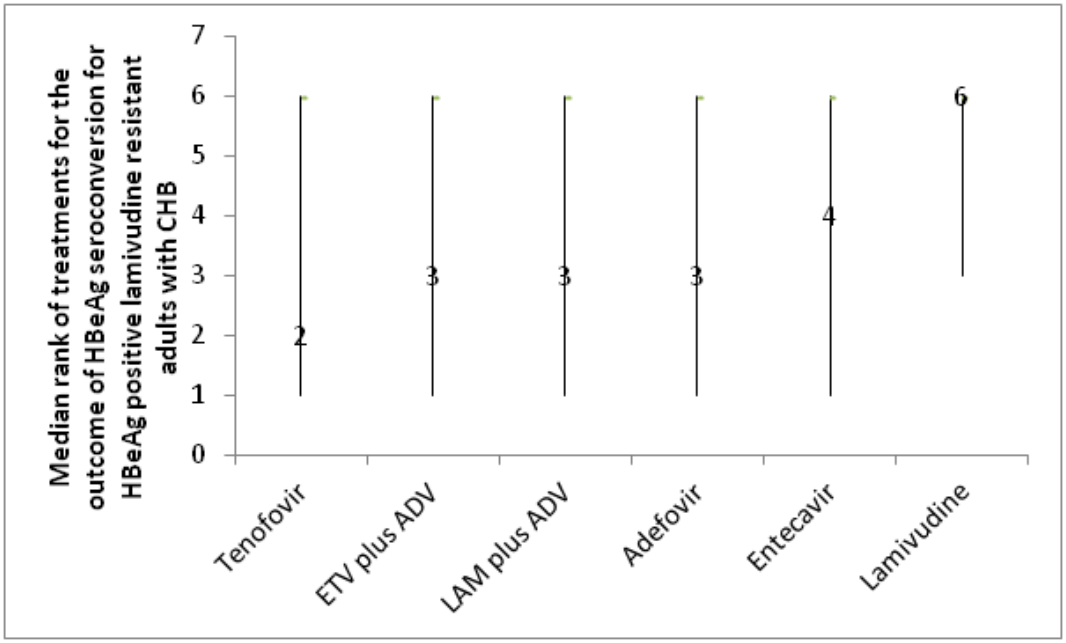

J.3.1.8 Sensitivity analysis for the 4th network of HBeAg seroconversion among lamivudine resistant adults with HBeAg positive CHB infection

No sensitivity analysis could be performed for the network of HBeAg seroconversion in the lamivudine resistant group as all included studies used mixed populations of HBeAg positive and negative people with CHB (Table 17).

J.3.1.9 Nucleoside naïve adults with HBeAg negative chronic hepatitis B (CHB)

Network 5: proportion of people achieving undetectable HBV DNA (<300 copies/ml) at the end of 12 months of antiviral treatment

A total of 16 studies met the inclusion criteria for the network for HBeAg negative adults with chronic hepatitis B infection. Figure 15 shows the network for nucleoside naïve adults with HBeAg negative CHB. The type of line connecting two treatments indicates the number of included studies in which the interventions connected by the line were compared directly. Pegylated alpha 2b and pegylated alpha 2b plus lamivudine could not be connected to the network. Six studies from the original (direct comparisons) evidence review were excluded from the NMA. Table 22 shows the list of excluded studies and reason(s) for exclusion.

Figure 31: Network for undetectable HBV DNA (<300copies/ml) at the end of 12 months of antiviral treatment

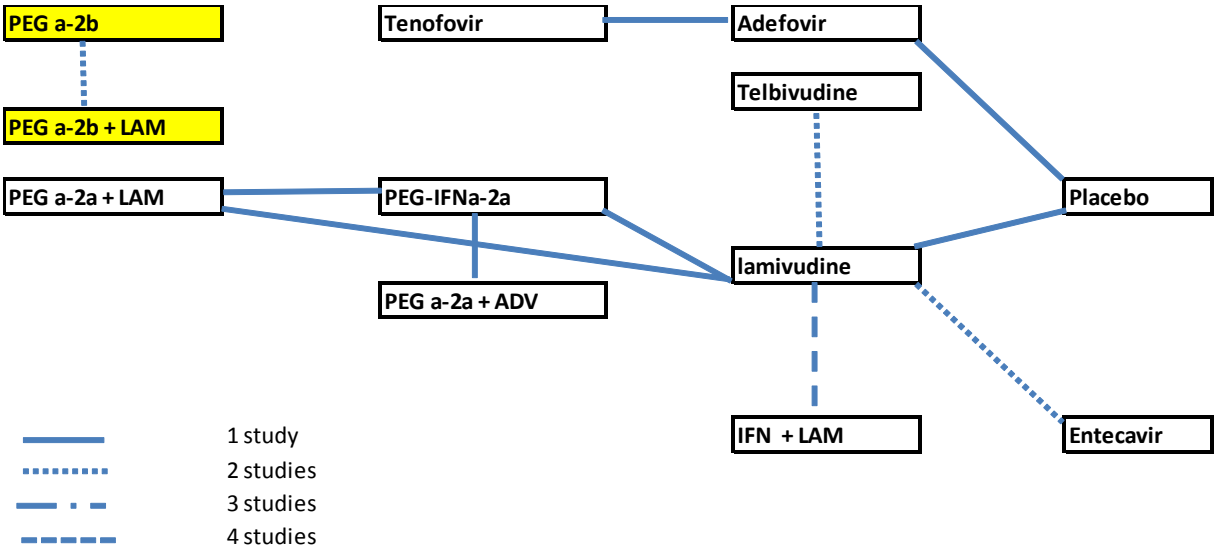

Note: Boxes in yellow are the antiviral treatments included in the evidence review of direct comparisons but not connected with the network of undetectable HBV DNA for HBeAg negative people with CHB

Table 88: Studies from the direct pair-wise evidence review which were excluded from the NMA for the 5th network

Trials excluded from the NMA of nucleoside naïve adults with HBeAg negative CHB	Reason(s) for exclusion
Chan 2007	Outcomes measured at the end of 104 weeks
Liaw 2009	Outcomes measured at the end of 104 weeks
Shi 2006	Drug sequence not currently used in clinical settings
Matsuura 2011	Population was not nucleos(t)ide naïve - responders to previous LAM treatment
Fung 2011	Population was not nucleos(t)ide naïve - responders to previous ETV treatment
Scotto 2006	Did not report outcome of interest

Most included studies applied similar methods (e.g. randomisation procedure, allocation concealment) and study populations were comparable. Of the 13 included studies, six were double-blind (Yao 2007; Lai 2006; Hou 2008; Lai 2007; Hadziayannis 2003; Marcellin 2008), two were partially double blinded (Tassopoulos 1999; Marcellin 2004), three were not blinded (Piccolo 2008; Yurdaydin 2005; Economou 2005) and two were unclear about blinding (Santantonio 2002; Akarca 2004). Ten trials had adequate randomisation procedure (Piccolo 2008; Tassopoulos 1999; Hadziayannis 2003; Marcellin 2004; Marcellin 2008; Akarca 2004; Economou 2005; Yao 2007; Hou 2008; Lai 2007) and six trials had adequate allocation concealment (Piccolo 2008; Hadziayannis 2003; Marcellin 2004; Yurdaydin 2005; Yao 2007; Hou 2008).

One trial (Tassopoulos 1999) showed baseline differences in HBV DNA levels between the two trial arms. Four trials (Tassopoulos 1999; Santantonio 2002; Akarca 2004; Yurdaydin 2005) included populations with high baseline HBV DNA levels, relative to other trials. One trial (Economou 2005) had a relatively high rates of cirrhosis at baseline (IFN + LAM: 45.8% and LAM: 50% cirrhosis), compared to other trials. Five trials included some patients who had previously been treated with nucleos(t)ides, and the proportion ranged from 4% to 23%. One trial (Tassopoulos 1999) did not report undetectable HBV DNA data at year 1 in the placebo arm; outcome data assessed at week 24 had been used and included in the network, assuming that the result would not change significantly at year 1 as there would not

be any treatment-related effect. This was decided and agreed by the GDG in order to form a more complete network, without losing some of the important antiviral drugs.
Four of the 13 trials used the HBV DNA threshold of 300copies/ml as the lowest limit of detection; four trials used the threshold of 400 copies; one trial used 2,000 IU/ml; the remaining four trials used thresholds ranged from 2.5 to 5 pg/ml, two of which compared Interferon plus lamivudine with lamivudine alone. HBV DNA data were converted to the same common measure unit (copies/ml) where possible.
Baseline population characteristics data of included trials for the network of undetectable HBV DNA (<300 copies/ml) at the end of one year of treatment are shown in Table 23.

Table 89: Baseline characteristics of included studies in the network of nucleoside naïve adults with HBeAg negative CHB

Study	Comparators	Patients' characteristics	Baseline HBV DNA levels, mean (SD)/ median (range)	Baseline ALT levels, mean (SD)/median (range)	HAI mean (SD)/ median (range)	Cirrhosis (%)
Hadziayannis 2003	Adefovir	LAM arm: 53% previously treated (8% LAM; 39% IFN) PLC arm: 64% previously treated (7% LAM; 46% IFN)	6.9 (0.90) log copies/ml	143 (125.3) U/L	10 (2-17)	11
	placebo		6.9 (1.0) log copies/ml	149.9 (195.2) U/L	9 (2-16)	10
Tassopoulos 1999	Lamivudine	Nucleos(t)ide naïve (some had previous IFN)	255 (1.3-18000)pg/ml = 1386.8 log copies/ml	3.2 (0.6-16.4) x ULN*	Knodell inflammatory score: 5(1-9)	18
	Placebo		95.5 (1.3-3900)pg/ml=520.5 log copies/ml	3.3 (0.7-12.5) x ULN	7 (2-10)	14
Yao 2007	Entecavir	Nucleos(t)ide naïve (some had previous IFN)	7.7 (1.28) log10 copies	225 (169) U/L	Not reported	No information
	Lamivudine		7.59 (1.33) log10 copies	164 (83) U/L		
Lai 2006	Entecavir	Nucleos(t)ide naive	7.6 (1.8) log10 copies	141 (114.7) U/L	Knodell inflammatory score: 8.0 (2.7)	5
	Lamivudine		7.6 (1.7) log10 copies	143 (119.4) U/L	7.7 (2.8)	10
Marcellin 2004	Lamivudine	8% previous IFN; 5% previous LAM	7.24 (1.78) log10 copies	105.7 (128.2)U/L	Not reported	29
	Pegylated IFN a2a	6% previous IFN; 4% previous LAM	7.14 (18.84) log10 copies	94.4 (85.9) U/L		31
	Pegylated IFN a2a + Lamivudine	10% previous IFN; 8% previous LAM	7.35 (2) log10 copies	90.8 (76.2) U/L		22

Study	Comparators	Patients' characteristics	Baseline HBV DNA levels, mean (SD)/ median (range)	Baseline ALT levels, mean (SD)/median (range)	HAI mean (SD)/ median (range)	Cirrhosis (%)
Hou 2008	Telbivudine	Nucleos(t)ide naive	7.8 (SE0.39) log10 copies	162 (23.9) U/L	Not reported	No information
	Lamivudine		7.6 (SE0.35) log10 copies	177 (75.2) U/L		
Lai 2007	Telbivudine	Nucleos(t)ide naive	7.7 (0.12) log10 copies	137 (6.94) U/L	Mean: 9.0	No information
	Lamivudine		7.4 (0.1) log10 copies	143.7 (8.74) U/L	Mean: 9.6	
Marcellin 2008	Tenofovir	17% previous IFN; 17% LAM/emtricitabine	6.86 (1.31) log10 copies	127.5 (101.21) U/L	Knodell fibrosis score: 2.3 (1.21) Inflammatory score: 7.8 (2.44)	No information
	Adefovir	18% previous IFN; 18% LAM/emtricitabine	6.98 (1.27) log10 copies)	163.6 (146.02) U/L	Knodell fibrosis score: 2.4 (1.23) Inflammatory score: 7.9 (2.18)	
Kaymakoglu 2007	Pegylated IFN a2b + LAM	No information	209.6 (207.8)pg/ml=1142.3 log10 copies	161.5 (127.4)U/L	8.3 (2.9)	No information
	Pegylated IFN a2b		182.3(175.4)pg/ml=993.5 log10 copies	130.4 (45) U/L	7.0 (3.2)	

Study	Comparators	Patients' characteristics	Baseline HBV DNA levels, mean (SD)/ median (range)	Baseline ALT levels, mean (SD)/median (range)	HAI mean (SD)/ median (range)	Cirrhosis (%)
Papadopoulos 2009	Pegylated IFN a2b + LAM	No information	5.78 log10 copies	135.7 U/L	Not reported	No information
	Pegylated IFN a2b		6.16 log10 copies	96.5 U/L		
Santanonio 2002	IFN + lamivudine	Nucleos(t)ide naive	235 (446)pg/ml=1280.8 log10 copies	224 (175) U/L	Not reported	32 total
	lamivudine		242(317)pg/ml=1318.9log10 copies	235 (446) U/L		
Akarca 2004	IFN + lamivudine	Nucleos(t)ide naive	114.5 (7-<2000)pg/ml=624 log10 copies	163 (77) U/L	Not reported	0
	lamivudine		114 (5-<2000)pg/ml=621.3 log10 copies	161 (87) U/L		0
Yurdaydin 2005	IFN a2a + lamivudine	Nucleos(t)ide naive	371.6 (627.6)pg/ml=2025.2 log10 copies	123.9 (83.7) U/L	Not reported	N=5
	lamivudine		273.1 (560.2)pg/ml=1488.4 log10 copies	121.8 (80.9) U/L		N=6
Economou 2005	IFN a2b + lamivudine	Nucleos(t)ide naive	6.1 (5.2-7.2) log10 copies	79 (57-100) U/L	Not reported	45.8
	lamivudine		5.9 (5.2-6.6) log10 copies	59 (52-94) U/L		50
Piccolo 2008	Pegylated IFN a2a + Adefovir	23% previous nucleos(t)ide	5.9 (1) log10 copies	3.43 (2.7) x ULN*	Not reported	6.7 total
	Pegylated IFN a2a	13.3% previous nucleos(t)ide	5.7 (0.9) log10 copies	3.18 (3.3) x ULN		

**ULN not specified by authors*

Table 90: Study data for the network of the frequency of nucleos(t)ide naïve adults achieving undetectable HBV DNA (<300 copies/ml) at the end of 12 months of treatment

Study	HBV DNA threshold ▪	Comparator1	Comparator2	Comparator3	Comparator1			Comparator2			Comparator3		
					N*	N~	NR	N*	N~	NR	N*	N~	NR
Yao 2007	300 copies/ml	ETV	LAM	-	31	NA	33	29	NA	40	-	-	-
Lai 2006	300 copies/ml	ETV	LAM	-	293	NA	311	225	NA	296	-	-	-
Hou 2008	300 copies/ml	TEL	LAM	-	17	NA	20	17	NA	22	-	-	-
Lai 2007	300 copies/ml	TEL	LAM	-	196	NA	222	160	NA	224	-	-	-
Hadziayannis 2003	400 copies/ml	ADV	Placebo	-	63	61	123	0	0	61	-	-	-
Marcellin 2004	400 copies/ml	LAM	Peg 2a	Peg 2a + LAM	133	131	155	112	109	165	156	153	162
Marcellin 2008	400 copies/ml	TDF	ADV	-	233	229	241	79	77	117	-	-	-
Economou 2005	400 copies/ml	IFN 2b + LAM	LAM	-	21	21	21	20	20	26	-	-	-
Tassopoulos 1999**	2.5 pg/ml	LAM	Placebo	-	39	17	53	20	0	60	-	-	-
Piccolo 2008	2000IU/mL	Peg 2a +ADV	Peg 2a	-	20	15	25	11	6	25	-	-	-
Santanonio 2002	5 pg/ml	IFN + LAM	LAM	-	21	10	24	10	0	26	-	-	-
Akarca 2004	2000 pg/ml	IFN + LAM	LAM	-	40	9	40	40	9	40	-	-	-
Yurdaydin 2005	5 pg/ml	IFN 2a + LAM	LAM	-	36	19	37	35	18	37	-	-	-

▪ As reported in the trial, N; number of events as reported in the trial, N~; number of events after transformation based on the lower limit of HBV DNA detection of 300 copies/ml, NR; number completed the trial, NA, not applicable*

***% of achieving undetectable HBV DNA in the placebo arm assessed at week 24 has been included in the NMA, as this outcome was not reported at one year.*

J.3.1.10 Network 5: proportion of people achieving undetectable HBV DNA (<300 copies/ml) at the end of 12 months of antiviral treatment

Both fixed and random effects models were fitted. Between-study heterogeneity and goodness of fitness of both models are shown in Table 25. DICs showed 4.6-point difference between the fixed and random effects models. The random effects model showed a residual

deviance of 28.76 and it was closer to the number of unconstrained data points, 27. Therefore, results of the random effects model are presented.
Substantial between-study heterogeneity was found in this network, as indicated by the standard deviation on the log OR scale (1.13). Heterogeneity was further explored by comparing the effect size of each treatment to the extent of between studies variation. Table 26 shows the results of predicting the confidence intervals of the outcome (undetectable HBV DNA <300 copies/mL) of a future trial of infinite size taking into account between trials variation, and comparing with the confidence intervals of the log ORs as produced by the NMA based on sampling error (within study variation) only .
The results suggested that the confidence intervals of comparable magnitude, except for placebo. The CI based on sampling error only for placebo was -7.42 to -0.33 and the CI based on a future trial of infinite size was -8.06 to 0.31; but the difference was not substantial. In general, the confidence intervals were not substantially widened by including between-study variance and heterogeneity was not a problem in this network.

Table 91: Measures of fitness of fixed (FE) and random (RE) effects models for the fifth network

	FE model	RE model
Measure of between study heterogeneity		
Standard deviation on the ORs scale (SD)^	-	1.134
Measure of goodness of fit		
Residual deviance (r)*	37.18	28.76
Deviance information criterion (DIC)	161.63	157.06

^Values of SD from 0.1-0.5 are reasonable, from 0.5-1.0 are considered fairly high and greater than 1.0 represents substantial heterogeneity.
**Compared to 27 data points*

Table 92: Investigation of between study heterogeneity in the results of the random effects model for the outcome of undetectable HBV DNA (<300 copies/mL)

Treatment	Mean Log OR (SD)	Between study heterogeneity	Predictive SD	CI based on sampling error	CI based on a future very large trial
Placebo	-3.88 (1.81)	1.13	2.14	-7.42 to -0.33	-8.06 to 0.31
Entecavir	1.76 (0.95)	1.13	1.48	-0.11 to 3.63	-1.14 to 4.66
Telbivudine	0.92 (0.95)	1.13	1.48	-0.94 to 2.78	-1.98 to 3.82
Adefovir	0.78 (2.52)	1.13	2.76	-4.15 to 5.71	-4.63 to 6.18
Tenofovir	3.10 (2.82)	1.13	3.04	-2.43 to 8.63	-2.86 to 9.06
Interferon + lamivudine	1.25 (0.77)	1.13	1.37	-0.26 to 2.75	-1.44 to 3.93
Pegylated interferon a2a	-1.04 (1.25)	1.13	1.69	-3.49 to 1.42	-4.35 to 2.27
Pegylated interferon a2a + lamivudine	1.18 (1.29)	1.13	1.72	-1.36 to 3.72	-2.19 to 4.55
Pegylated interferon a2a + adefovir	0.60 (1.87)	1.13	2.18	-3.06 to 4.25	-3.68 to 4.88

Table 27 summarises the results of the conventional pair-wise meta-analyses (head to head comparisons) (white area), together with the results computed by the NMA for every possible treatment comparison (grey area). Both results were presented as (ORs) (95% c.i).

This network meta-analysis suggested no significant differences in the proportion of people achieving undetectable HBV DNA (<300 copies/ml) between all the antiviral treatments. All antiviral treatments, were found to be significantly superior to placebo (Figure 3). However, the widths of the confidence intervals of the ORs were very wide, thus results should be interpreted with caution in terms of their precision. No inconsistency was found between the results of the pair-wise and network meta-analysis.

In this analysis, tenofovir was found to have the highest probability (76.6%) of being the best treatment to achieve undetectable HBV DNA (<300 copies/ml) at the end of 1 year of treatment followed by entecavir (18%), combination of pegylated IFN a2a and lamivudine (3.4%) and combination of pegylated IFN a2a and adefovir (1.5%). All the other antiviral treatments had very low probability of being the best at achieving undetectable HBV DNA (<300copies/mL) (Table 28).

The 95% credible intervals of the median rank of the treatments were wide. Although tenofovir was shown to be the best treatment of achieving undetectable HBV DNA at the end of 1 year of antiviral treatment for HBeAg negative nucleos(t)ide naïve people with a probability of 76.6%, the width of the 95% credible interval of its median rank could range from the 1st to the 7th best treatment (Figure 16). Therefore, results should be interpreted with caution.

Table 93: Odds ratios (95% C.I) from conventional (white area) and network meta-analyses (grey area) for the proportion of nucleoside naïve HBeAg negative CHB infected adults achieving undetectable HBV DNA (<300 copies/ml) at the end of 12 months of antiviral treatment (random effects model)

Lamivudine	**0.04 (0.00-0.28)**	**5.21 (3.11-8.73)**	**2.86 (1.77-4.61)**			2.58 (0.71-9.35)	**0.36 (0.21-0.61)**	**3.11 (1.40-6.94)**	
0.02 (0.00-0.14)	**Placebo**			**60.02 (8.06-446.72)**					
5.31 (3.21-9.08)	**230.7 (33.29-5065)**	**Entecavir**							
2.90 (1.81-4.75)	**125.2 (18.51-2767)**	0.55 (0.27-1.10)	**Telbivudine**						
1.87 (0.06-46.4)	**78.81 (14.11-1342)**	0.35 (0.01-9.13)	0.64 (0.02-16.79)	**Adefovir**	**9.91 (4.95-19.86)**				
19.24 (0.61-604.3)	**819 (124-15110)**	3.59 (0.11-98.53)	6.60 (0.20-181.5)	**10.13 (5.14-21.27)**	**Tenofovir**				
2.06 (1.15-3.80)	**88.92 (12.94-1991)**	**0.39 (0.18-0.86)**	0.71 (0.33-1.54)	1.09-0.04-33.8)	0.11 (0.00-3.48)	**Interferon + lamivudine**			
0.35 (0.20-0.60)	**15.14 (2.21-339.9)**	**0.07 (0.03-0.14)**	**0.12 (0.06-0.25)**	0.19 (0.01-5.91)	0.02 (0.00-0.61)	**0.17 (0.07-0.38)**	**Peg 2 a**		
3.20 (1.47-7.64)	**141.2 (18.59-3261)**	0.60 (0.23-1.64)	1.11 (0.44-2.93)	1.73 (0.06-57.03)	0.17 (0.01-5.93)	1.56 (0.57-4.43)	**9.07 (4.45-20.76)**	**Peg 2a + lamivudine**	
1.78 (0.47-7.24)	**79.5 (7.67-2124)**	0.34 (0.08-1.46)	0.61 (0.15-2.66)	0.96 (0.03-36.67)	0.09 (0.00-3.84)	0.86 (0.20-3.94)	**5.03 (1.52-18.44)**	0.55 (0.13-2.42)	**Peg 2a + adefovir**

Numbers in bold denote statistically significant results (95% CI credible intervals do not include 1)

Table 94: Probabilities of being the best treatment for achieving undetectable HBV DNA (<300 copies/mL) and the median proportion (95% c.i) with undetectable HBV DNA at year 1 among nucleos(t)ide naïve adults with HBeAg negative CHB infection

Treatment	Probability of being the best treatment for achieving undetectable HBV DNA (<300 copies/ml)	Proportion of adults with undetectable HBV DNA (<300 copies/ml) (median, 95% c.i)
Tenofovir	76.6%	97.6% (56.7,99.9)
Entecavir	18.0%	91.9 % (87.3, 95.1)
Pegylated IFN a2a + lamivudine	3.4%	87.3% (75.9, 94.2)
Pegylated IFN a2a + adefovir	1.5%	79.2% (50.4, 93.9)
Telbivudine	0.5%	86.1% (79.4, 91.1)
Interferon plus lamivudine	0%	81.5% (71.0, 89.1)
Adefovir	0%	80.0 % (12.0, 99.0)
Lamivudine	0%	-
Placebo	0%	4.8% (0.2, 23.6)
Pegylated IFN a2	0%	43.1% (30.1, 56.3)

Figure 32: Median rank order for treatments based on the outcome of undetectable HBV DNA<300 copies/ml at the end of 1 year of treatment

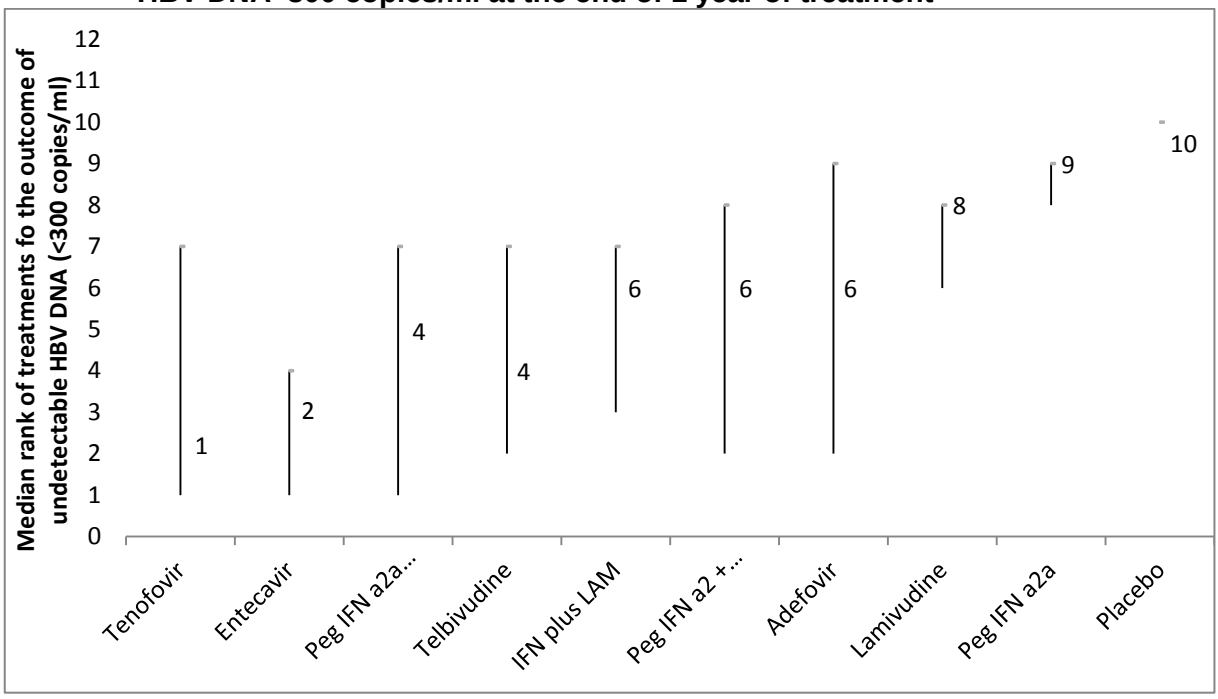

J.3.1.11 Sensitivity analysis for the 5th network of undetectable HBV DNA among nucleoside naive adults with HBeAg negative CHB infection

Sensitivity analyses were carried out for undetectable HBV DNA among CHB infected HBeAg negative adults, as reported in section 1.3.1.3.

Figure 33: Network for the sensitivity analysis of including only studies using the threshold of <300 copies/ml as the lowest limit of undetectable HBV DNA

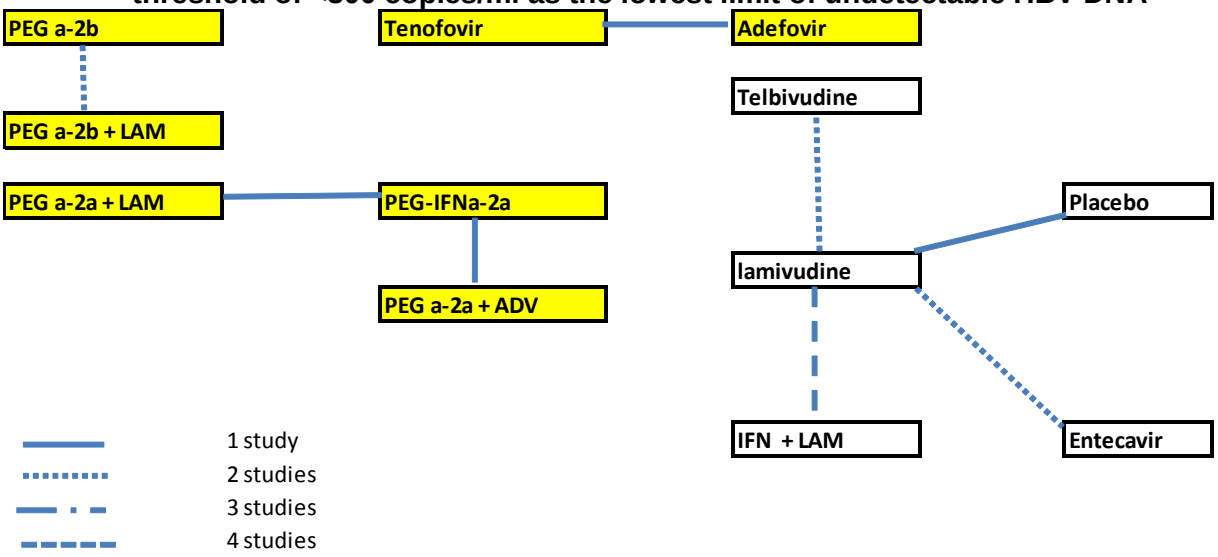

Sensitivity analysis on the network of undetectable HBV DNA by including studies with only nucleoside naïve populations (a total of 9 trials included) showed that entecavir had the highest probability for achieving undetectable HBV DNA (60.6%), followed by interferon plus lamivudine (23.2%) and telbivudine (16.1%). Fitting of the fixed effects model appeared to be satisfactory for the sensitivity analysis, the residual deviance was 19.71, which was close to the number of unconstrained data points, 18. It is important to note that the only trial on tenofovir was not included in the sensitivity analyses.

Figure 34: Network for the sensitivity analysis of including only studies using the 300 copies/ml as the lowest limit of undetectable HBV DNA

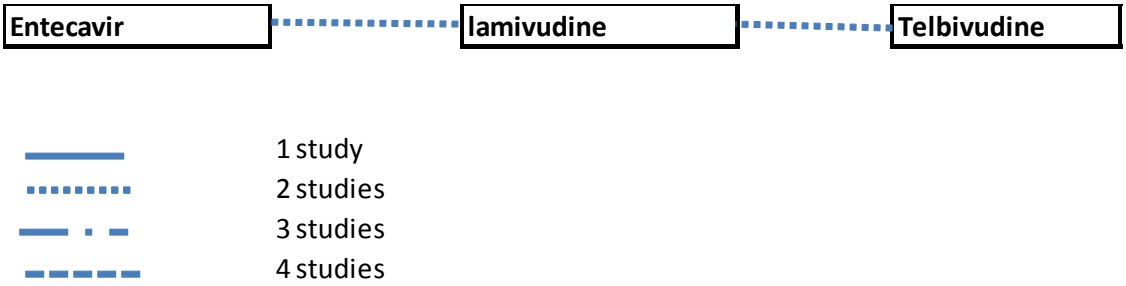

Sensitivity analysis by including only studies that used the HBV DNA threshold of 300copies/ml, as the lowest limit of detection, was not performed as only four trials were included, as shown in Figure 18.

Table 95: Sensitivity analyses including 100% nucleos(t)ide naïve populations (random effects model)

	Sensitivity analysis 1: By including only studies with nucleoside naïve people (100%)	
Treatment	Probability of being the best treatment for achieving undetectable	Proportion of nucleos(t)ide naive adults with HBV DNA <300 copies/ml at year 1

	Sensitivity analysis 1: By including only studies with nucleoside naïve people (100%)	
	HBV DNA (<300 copies/mL)	(median, 95% credible intervals)
Lamivudine	0.0%	-
Placebo	0.0%	3.9 (0.0, 49.5)%
Entecavir	61.1%	91.3 (61.0, 98.7)%
Telbivudine	16.1%	82.5 (38.8, 96.9)%
IFN plus LAM	22.7%	85.4 (62.3, 97.2)%

J.3.1.12 Lamivudine resistant adults with HBeAg negative chronic hepatitis B (CHB)

Four trials (Vasiliadis 2010; Rapti 2007; Aizawa 2010; Akyildiz 2007) met the inclusion criteria for the HBeAg negative lamivudine resistant populations but they did not form a connected network. All four trials compared switching to adefovir (monotherapy) versus adding on adefovir (lamivudine plus adefovir combination therapy) in lamivudine resistant patients.

Figure 35: Network for the proportion of people achieving undetectable HBV DNA at the end of 12 months of antiviral treatment

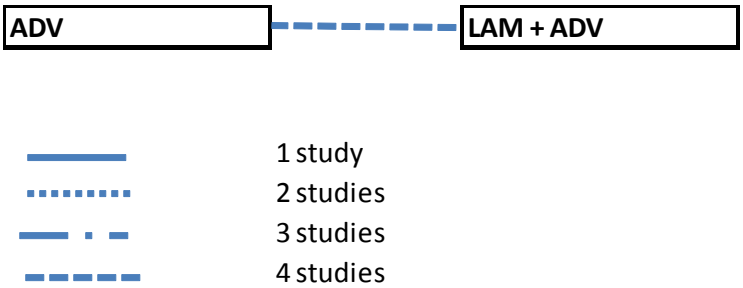

J.4 Discussion

Based on the results of conventional meta-analyses of direct evidence, as has been previously presented in chapter X and appendix X, ascertaining the most effective intervention for the antiviral treatment of people with CHB presents certain challenges. In order to overcome the difficulty of interpreting the conclusions from these numerous separate comparisons, a NMA was performed by including all the available evidence, given they met the inclusion criteria of the protocol.

The findings from the NMA were used to facilitate the GDG in decision making when developing recommendations for the antiviral treatment of nucleoside naïve HBeAg positive and negative and to base the cost-effectiveness analysis.

Networks for HBeAg positive CHB patients who are nucleos(t)ide naïve

The first network where the outcome of interest was undetectable HBV DNA levels (<300 copies/ml) at the end of 12 months of treatment suggested all treatments were found to be superior to placebo. Entecavir, telbivudine and tenofovir were significantly more effective than lamivudine. Tenofovir was significantly more effective in achieving this outcome compared to all the other antiviral drugs included in the network except when compared to pegylated interferon alpha-2a plus lamivudine combination therapy. Pegylated interferon alpha plus lamivudine combination therapy was only significantly more effective in achieving this outcome when compared to interferon or pegylated interferon alpha monotherapy. In the ranking of treatments, tenofovir was shown to be the best treatment (ranked first) for achieving undetectable HBV DNA at the end of one year. Pegylated interferon alfa-2a plus

lamivudine combination therapy was ranked second for achieving this outcome but in a lower proportion of stimulations.
The second network for HBeAg seroconversion at the end of 12 months of treatment, no antiviral therapy was found to be significantly better than the other. Interferon plus lamivudine combination therapy was ranked first for achieving HBeAg seroconversion at the end of one year. Sequential thereapy, switching from lamivudine to lamivudine plus interferon combination therapy and tenofovir monotherapy were ranked second and third, respectively, for this outcome.
Models for both networks were fitted very well, as demonstrated by a low residual deviance; and no inconsistencies were found in the networks.

Networks for HBeAg positive CHB patients with lamivudine resistance

Switching to tenofovir monotherapy or entecavir plus adefovir combination therapy was found to be the most effective antiviral treatments to achieve undetectable HBV DNA at the end of one year treatment. Switching to tenfovir monotherapy or adding adefovir to lamivudine was found to be the most effective antiviral treatment to achieve HBeAg seroconversion at the end of one year treatment.

Networks for HBeAg negative CHB patients who are nucleos(t)ide naïve

No antiviral therapy was found to be significantly better than the other in achieving undetectable HBV DNA (<300 copies/ml) at the end of 12 months treatment. The credible intervals were very wide and data were sparse. The majority of the trials used lamivudine as the comparator. In terms of ranking of treatments, tenofovir was ranked first for achieving undetectable HBV DNA (<300 copies/ml) followed by entecavir at the end of one year treatment. The model appeared to fit very well, as shown by the residual deviance and no inconsistency was found between the data from the direct comparisons and the network meta-analysis. NMA could not be conducted for HBeAg negative patients with lamivudine resistance as the treatment comparisons failed to connect to one another.
No significant inconsistency was observed in all models. A number of the included trials was based on a mixed population of nucleos(t)ide naïve and nucleo(t)ide experienced. Only those with less than 1/3 nucleos(t)ide experienced patients were included in this NMA. Sensitivity analyses including only 100% nucleos(t)ide naïve patients did not change the results significantly. Some trials, particularly older trials, used a HBV DNA threshold or lowest limit of detection other than 300copies/mL (as pre-specified in the protocol). Threshold transformations were performed using a validated formula. Sensitivity analyses including trials that used the threshold of 300 copies/mL did not change the results significantly.
Our NMA results should be interpreted with caution in view of the following limitations:

1) The number of studies included for some comparisons was small, for example, there was only one trial evaluating the efficacy of tenofovir. This had led to the very wide credible intervals in the ORs for this antiviral drug.
2) A small number of studies assessing different combination therapies (6 studies, four of which included the same comparator; interferon plus lamivudine) were included, because other studies of combination therapies did not meet the inclusion criteria pre-defined in the protocol (e.g. treatment duration longer than one year, majority of patients were nucleos(t)ide experienced).
3) Only two sequential treatments (switching from adefovir to telbivudine and lamivudine followed by lamivudine and interferon combination therapy) were included as in some trials, the drug sequences under investigation are no longer used in current clinical practice.
4) Three of the included studies in the model (Barbaro 2001, Ayaz 2006, Dienstag 1999) had very high baseline HBV DNA levels that could introduce bias in the estimates of treatments effect. Further sensitivity analysis demonstrated that by excluding these three studies, no difference in the ranking of treatments observed for the outcome of undetectable HBV DNA (data not shown).
5) Not all trials have a common comparator, but all interventions could be connected in the network. It is important to note that comparisons with longer paths will have less precision, for example, tenofovir in network 5 – undetectable HBV DNA in HBeAg negative CHB patients. The 95%CI credible intervals of the log ORs were very wide

in particular for most interventions comparing with placebo. This could be due to the lack of direct trial data to inform each comparison; and this led to a lot of uncertainty. Since indirect evidence is inherently less precise than direct evidence, the more links that are required to connect a treatment to the baseline comparator, the less precision there will be in the estimation of effect size for that treatment.

6) Undetectable HBV DNA and HBeAg seroconversion were chosen as two of the most important clinical outcomes for evaluating efficacy of antiviral treatment at year 1 for HBeAg positive people with CHB. HBsAg loss and/or seroconversion, considered as the optimal long term goal of antiviral treatment (or a "cure") was not included in the analysis as it was a rare outcome. A number of included trials had measured this outcome, but given the relatively short follow up in these patients, i.e. end of 48 weeks treatment, HBsAg loss/seroconversion was rarely achieved.
7) Other outcomes such as resistance and side effects could also be important in decision making and they had not been included in this NMA. The GDG considered that side effects were rare for nucleos(t)ides (lamivudine, tenofovir, entecavir, adefovir). Furthermore, resistance was mainly found in patients treated with lamivudine and adefovir treatments. Little and no resistance had been found for entecavir and tenofovir, respectively. These two factors will be accounted for in the economic modelling and the development of the recommendations. ALT normalisation or histological improvement was less common and few RCTs reported these outcomes.
8) This NMA examined each outcome independently and multiple outcomes are usually correlated.
9) This NMA did not address the sequence of antiviral therapy, i.e. first-, second- and third-line therapy; especially when there was treatment failure due to a number of reasons, e.g. sub-optimal/non response, intolerance, cross-resistance.
10) Many trials only reported outcomes at 48 to 52 weeks and follow up time was short. Chronic hepatitis B is a lifelong condition which is likely to require long time management. In a real life setting, antiviral therapy would not be stopped until therapeutic response had been reached (6 months after HBeAg seroconversion) and treatment duration would be longer than 48 weeks, as reported by the trials. Therefore, the NMA may not be sufficient enough to determine the optimal choice of treatment in a lifetime perspective. This applies to particularly children and young people who acquired hepatitis B infection at a young age, where antiviral treatment duration would be longer.

J.5 Conclusion

This analysis allowed us to combine the findings from different treatment comparisons presented in the reviews for antiviral treatment of adults with chronic hepatitis B even when there was a lack of trial data for many treatment comparisons.
Based on the RCT evidence currently available, tenofovir was shown to be the most effective antiviral treatment for achieving undetectable HBV DNA levels (<300 copies/ml) for nucleos(t)ide naïve people with HBeAg positive and negative CHB infection and for lamivudine resistant HBeAg positive people, among all the licensed antiviral drugs. For nucleoside naïve people with HBeAg positive CHB, the combination treatment of interferon plus lamivudine was shown to be the most effective for achieving HBeAg seroconversion at the end of one year treatment.

J.6 WinBUGS codes

```
#Random effects model for multi-arm trials (any number of arms)
model{
```

```
for(i in 1:NS){
        w[i,1] <-0
              mu[i] ~ dnorm(0,.0001)                                    # vague priors for 24 trial
baselines
              for (k in 1:na[i])  {
                    r[i,k] ~ dbin(p[i,t[i,k]],n[i,k])                                  # binomial
likelihood
                              logit(p[i,t[i,k]])<-mu[i] + d[t[i,k]] - d[t[i,1]]
# model

#Deviance residuals for data i
      rhat[i,k] <- p[i,t[i,k]] * n[i,k]
      dev[i,k] <- 2 * (r[i,k] * (log(r[i,k])-log(rhat[i,k]))  +  (n[i,k]-r[i,k]) * (log(n[i,k]-r[i,k]) - log(n[i,k]-
rhat[i,k])))
                    }
          sdev[i]<- sum(dev[i,1:na[i]])
  }
d[1]<-0
for (k in 2:NT){d[k] ~ dnorm(0,.0001) }                    #  vague priors for basic parameters
sd~dunif(0,2)                                    #  vague prior for random effects standard deviation
tau<-1/pow(sd,2)
sumdev <- sum(sdev[])                                                  # Calculate residual deviance

#Calculation of absolute probabilities of success#

BR~dnorm(meanBR,precBR)
for (k in 1:NT){
                                                                logit(T[k])<-BR + d[k]

                                                        }

#Calculation of relative risks#

for (k in 1:NT){
                                                                                    rr[k]<-T[k]/T[1]
                                                        }
# pairwise ORs
for (c in 1:(NT-1))
        {  for (k in (c+1):NT)
              {  lor[c,k] <- d[k] - d[c]
                 log(or[c,k]) <- lor[c,k]
                                                lrr[c,k] <- log(rr[k]) - log(rr[c])
                                                log(rrisk[c,k]) <- lrr[c,k]
              }
         }

# Ranking and prob{Conner, 2005 CONNER2005 /id;Conner, 2005 CONNER2005 /id}
 for (k in 1:NT) {
             rk[k]<-NT+1-rank(d[],k)
best[k]<-equals(NT+1-rank(d[],k),1)}

}

# NT=no. treatments, NS=no. studies;
# NB : set up M vectors each r[,]. n[,] and t[,],  where M is the Maximum number of
treatments
```

per trial in the dataset. In this dataset M is 3.

Treatment code
HBeAg positive CHB
Network 1- undetectable HBV DNA

1. Lamivudine
2. Placebo
3. Interferon plus lamivudine
4. Entecavir
5. Adefovir
6. Interferon
7. Telbivudine
8. Tenofovir
9. Pegylated interferon a2a
10. Pegylated interferon a2a plus lamivudine
11. Telbivudine plus lamivudine
12. Adefovir plus lamivudine
13. Lamivudine to lamivudine plus interferon
14. Adefovir to telbivudine

Network 2 – HBeAg seroconversion

1. Lamivudine
2. Placebo
3. Entecavir
4. Adefovir
5. Telbivudine
6. Interferon
7. Interferon plus lamivudine
8. Tenofovir
9. Pegylated interferon a2a
10. Pegylated interferon a2a plus lamivudine
11. Telbivudine plus lamivudine
12. Adefovir plus lamivudine
13. Lamivudine to lamivudine plus interferon
14. Adefovir to telbivudine

HBeAg negative CHB
Network 5- undetectable HBV DNA

1. Lamivudine
2. Placebo
3. Entecavir
4. Telbivudine
5. Adefovir
6. Tenofovir
7. Interferon plus lamivudine
8. Pegylated interferon a2a
9. Pegylated interferon a2a plus lamivudine
10. Pegylated interferon a2a plus adefovir

HBeAg

###Data###

HBeAg positive CHB
##Network 1- undetectable HBV DNA

```
list(NS=21,NT=14)

 r[,1] n[,1] r[,2] n[,2] r[,3] n[,3] r[,4] n[,4] r[,5] n[,5] t[,1]  t[,2]  t[,3]     t[,4]     t[,5]    na[]
 104 230 64 243 182 246 NA NA NA NA 1 9 10 NA NA 3
 11 68 1 61 1 63 NA NA NA NA 1 6 13 NA NA 3
 129 321 236 340 NA NA NA NA NA NA 1 4 NA NA NA 2
 83 221 116 225 NA NA NA NA NA NA 1 4 NA NA NA 2
 8 20 15 21 NA NA 200 300 120 150 1 4 NA NA NA 2
 54 143 98 147 NA NA NA NA NA NA 1 7 NA NA NA 2
 187 463 275 458 NA NA NA NA NA NA 1 7 NA NA NA 2
 6 19 28 44 21 41 NA NA NA NA 1 7 11 NA NA 3
 25 40 22 35 NA NA 30 40 50 60 1 3 NA NA NA 2
 10 34 12 30 NA NA NA NA NA NA 1 3 NA NA NA 2
 1 72 1 74 NA NA NA NA NA NA 1 3 NA NA NA 2
 24 39 22 45 NA NA NA NA NA NA 1 12 NA NA NA 2
 3 63 1 70 NA NA NA NA NA NA 1 2 NA NA NA 2
 82 139 1 70 NA NA 21 59 NA NA 1 2 NA NA NA 2
 1 168 33 171 NA NA NA NA NA NA 2 5 NA NA NA 2
 25 50 24 50 NA NA NA NA NA NA 3 6 NA NA NA 2
 14 31 6 35 NA NA NA NA NA NA 3 6 NA NA NA 2
 20 32 3 15 NA NA NA NA NA NA 3 6 NA NA NA 2
 19 33 6 32 NA NA NA NA NA NA 4 5 NA NA NA 2
 18 44 27 45 25 46 NA NA NA NA 5 7 14 NA NA 3
 11 84 131 160 NA NA NA NA NA NA 5 8 NA NA NA 2

END
```

##initial values

```
list(

d=c(NA,0,0,0,0,0,0,0,0,0,0,0,0,0),
sd=.2,
mu=c(0,2,2,-2,1,-2,1,-3,2,2,-1,1,0,0,2,-2,1,-3,0,-1,-3),
```

```
delta = structure(.Data = c(NA,NA,NA,NA,NA,NA,NA,NA,-2,-
2,NA,NA,NA,NA,NA,NA,NA,NA,NA,3,NA,NA,NA,NA,NA,NA,1,NA,NA,NA,NA,1,NA,NA,NA,NA,NA,NA,NA,NA,NA,NA,NA,NA,2,NA,NA,NA,NA,NA,NA,NA,NA,
NA,NA,NA,NA,NA,0,NA,NA,NA,NA,NA,NA,NA,NA,NA,NA,NA,NA,NA,NA,NA,NA,-
2,NA,NA,NA,NA,NA,NA,NA,NA,NA,NA,NA,NA,NA,NA,2,NA,NA,NA,NA,NA,NA,NA,NA,NA,NA,NA,NA,NA,NA,-1,NA,NA,NA,0,NA,NA,NA,NA,NA,-
3,NA,NA,NA,NA,NA,NA,NA,NA,NA,NA,NA,NA,NA,-
3,NA,NA,NA,NA,NA,NA,NA,NA,NA,NA,NA,NA,NA,3,NA,NA,NA,NA,NA,NA,NA,NA,NA,NA,NA,NA,NA,NA,NA,NA,NA,NA,NA,NA,NA,NA,3,NA,NA,NA,-
3,NA,NA,NA,NA,NA,NA,NA,NA,NA,NA,NA,NA,NA,3,NA,NA,NA,NA,NA,NA,NA,NA,NA,NA,NA,NA,NA,NA,NA,NA,2,NA,NA,NA,NA,NA,NA,NA,NA,NA,NA,NA,
NA,NA,-3,NA,NA,NA,NA,NA,NA,NA,NA,NA,NA,NA,NA,NA,3,NA,NA,NA,NA,NA,NA,NA,NA,NA,NA,NA,NA,NA,-2,NA,NA,NA,NA,NA,NA,NA,NA,NA,NA,NA,-
3,NA,NA,NA,NA,NA,NA,NA,NA,NA,NA,NA,NA,NA,NA,NA,-3,NA,NA,NA,NA,NA,NA,0,NA,NA,NA,NA,NA,NA,NA,NA,1,NA,NA,NA,NA,NA,NA
),.Dim=c(21 , 14))))
```

Note: r[], number of events by trial arm; n[], total number of participants by trial arm; t[], treatment code; na[], number of trial arms

##Network 2 – HBeAg seroconversion

```
list(NS=17,NT=14)

 r[,1] n[,1] r[,2] n[,2] r[,3] n[,3] r[,4] n[,4] r[,5] n[,5] t[,1]  t[,2]  t[,3]     t[,4]     t[,5]    na[]
 9 161 20 171 NA NA NA NA NA NA 2 4 NA NA NA 2
 55 230 72 243 64 246 NA NA NA NA 1 9 10 NA NA 3
 14 68 12 60 20 62 NA NA NA NA 1 6 13 NA NA 3
 11 63 4 69 NA NA NA NA NA NA 1 2 NA NA NA 2
 64 321 74 340 NA NA NA NA NA NA 1 3 NA NA NA 2
 39 221 33 225 NA NA NA NA NA NA 1 3 NA NA NA 2
 4 20 3 21 NA NA NA NA NA NA 1 3 NA NA NA 2
 8 44 13 45 11 46 NA NA NA NA 4 5 14 NA NA 3
 26 143 36 147 NA NA NA NA NA NA 1 5 NA NA NA 2
 100 463 103 458 NA NA NA NA NA NA 1 5 NA NA NA 2
 4 19 14 44 6 41 NA NA NA NA 1 5 11 NA NA 3


14 80 32 153 NA NA NA NA NA NA 4 8 NA NA NA 2
 5 33 7 32 NA NA NA NA NA NA 3 4 NA NA NA 2
 4 29 4 31 NA NA NA NA NA NA 6 7 NA NA NA 2
 7 15 22 32 NA NA NA NA NA NA 6 7 NA NA NA 2
 2 34 6 30 NA NA NA NA NA NA 1 7 NA NA NA 2
 9 39 5 45 NA NA NA NA NA NA 1 12 NA NA NA 2
```

END

##initial values

```
list(
d=c(NA,0,0,0,0,0,0,0,0,0,0,0,0),
sd=.2,
mu=c(2,0,-1,2,2,0,2,0,3,-1,3,1,-3,-3,0,0,2),
delta = structure(.Data =
c(NA,NA,NA,3,NA,NA,NA,NA,NA,NA,NA,NA,NA,NA,NA,NA,NA,NA,NA,NA,NA,NA,NA,1,0,NA,NA,NA,NA,NA,NA,NA,NA,NA,2,NA,NA,NA,NA,NA,NA,-
1,NA,NA,3,NA,NA,NA,NA,NA,NA,NA,NA,NA,NA,NA,NA,NA,NA,-1,NA,NA,NA,NA,NA,NA,NA,NA,NA,NA,NA,NA,NA,-
2,NA,NA,NA,NA,NA,NA,NA,NA,NA,NA,NA,NA,NA,3,NA,NA,NA,NA,NA,NA,NA,NA,NA,NA,NA,NA,NA,NA,NA,-
1,NA,NA,NA,NA,NA,NA,NA,NA,1,NA,NA,NA,NA,2,NA,NA,NA,NA,NA,NA,NA,NA,NA,NA,NA,NA,NA,2,NA,NA,NA,NA,NA,NA,NA,NA,NA,NA,NA,NA,-
3,NA,NA,NA,NA,NA,0,NA,NA,NA,NA,NA,NA,NA,NA,NA,NA,2,NA,NA,NA,NA,NA,NA,NA,NA,NA,-2,NA,NA,NA,NA,NA,NA,NA,NA,NA,NA,NA,NA,NA,NA,-
3,NA,NA,NA,NA,NA,NA,NA,NA,NA,NA,NA,NA,-
1,NA,NA,NA,NA,NA,NA,NA,NA,NA,NA,NA,NA,2,NA,NA,NA,NA,NA,NA,NA,NA,NA,NA,NA,NA,NA,NA,NA,NA,NA,3,NA,NA
),.Dim=c(17 , 14))))
```

HBeAg negative CHB

##Network 5- undetectable HBV DNA

list(NS=13,NT=10)

```
 r[,1] n[,1] r[,2] n[,2] r[,3] n[,3] r[,4] n[,4] r[,5] n[,5] t[,1]  t[,2]  t[,3]     t[,4]     t[,5]    na[]
 39 53 20 60 NA NA NA NA NA NA 1 2 NA NA NA 2
 29 40 31 33 NA NA NA NA NA NA 1 3 NA NA NA 2


225 296 293 311 NA NA NA NA NA NA 1 3 NA NA NA 2
 131 155 109 165 153 162 NA NA NA NA 1 8 9 NA NA 3
 17 22 17 20 NA NA NA NA NA NA 1 4 NA NA NA 2
 160 224 196 222 NA NA NA NA NA NA 1 4 NA NA NA 2
 1 21 10 24 NA NA NA NA NA NA 1 7 NA NA NA 2
 5 40 8 40 NA NA NA NA NA NA 1 7 NA NA NA 2
 18 37 19 37 NA NA NA NA NA NA 1 7 NA NA NA 2
 20 26 21 21 NA NA NA NA NA NA 1 7 NA NA NA 2
 1 62 63 123 NA NA NA NA NA NA 2 5 NA NA NA 2
 77 117 229 241 NA NA NA NA NA NA 5 6 NA NA NA 2
 6 25 15 25 NA NA 21 59 NA NA 8 10 NA NA NA 2
END
```

```
##initial values
list(
d=c(NA,0,0,0,0,0,0,0,0,0),
sd=.2,
mu=c(3,2,3,-1,2,-3,2,2,-2,-1,1,-3,1),
delta = structure(.Data = c(NA,-3,NA,NA,NA,NA,NA,NA,NA,NA,NA,NA,-2,NA,NA,NA,NA,NA,NA,NA,NA,NA,-
2,NA,NA,NA,NA,NA,NA,NA,NA,NA,NA,NA,NA,NA,NA,-1,2,NA,NA,NA,NA,3,NA,NA,NA,NA,NA,NA,NA,NA,-
1,NA,NA,NA,NA,NA,NA,NA,NA,NA,NA,NA,NA,3,NA,NA,NA,NA,NA,NA,NA,NA,NA,-2,NA,NA,NA,NA,NA,NA,NA,NA,NA,2,NA,NA,NA,NA,NA,NA,NA,NA,NA,-
3,NA,NA,NA,NA,NA,NA,NA,3,NA,NA,NA,NA,NA,NA,NA,NA,NA,NA,1,NA,NA,NA,NA,NA,NA,NA,NA,NA,NA,NA,NA,NA,-1

),.Dim=c(13 , 10))))
```

Note: r[], number of events by trial arm; n[], total number of participants by trial arm; t[], treatment code; na[], number of trial arms

J.7 In vitro review

J.7.1 Introduction

This evidence review was carried out in part of the network meta-analysis (NMA) of antiviral drugs in people infected with chronic hepatitis B. Due to the absence of RCT data on the clinical effectiveness data of tenofovir in the lamivudine resistant CHB population, an assumption was made that the efficacy of tenofovir was comparable in both nucleos(t)ide naïve and lamivudine resistant populations (see NMA rationale and protocol for more details). And data for nucleos(t)ide naïve population on tenofovir (Marcellin 2008) was used in the lamivudine resistant network. The purpose of this evidence review was to support this assumption, by using other sources of data, including in vivo and in vitro studies.

J.7.2 Review question: Is the efficacy of tenofovir different between nucleos(t)ide naïve and lamivudine resistant HBV DNA strains?

For full details see review protocol in Appendix A.

Table 96: PICO characteristics of review question

Protocol	
Population	Children, young people and adults with CHB infection In vitro studies – HBV DNA strains (Hep G2 cells) with or without lamivudine resistant mutation
Intervention	- Tenofovir
Outcomes	In vitro studies: 1. % of HBV protein production 2. EC_{50} concentrations

- **Clinical evidence**

Primary lamivudine resistance mutations include rtM204Vand rtM294I which are located on the YMDD motif of HBV reverse transcriptase. Two additional mutations observed in conjunction with rtM204I/V are rtL180M and rtV173L. Four main patterns of lamivudine resistance mutations have been observed in patients: 1) rtL180M + rtM204V; 2) rtL180M + rtM204V + rtV173L; 3) rtM204I and 4) rtL180M + M204I.
A standard dose-response curve [concentration (x-axis) vs. response (y-axis)] is defined by four parameters, including the baseline response, the maximum response, the slope and EC_{50} (the drug concentration that induces a response half way between baseline and maximum).
EC_{50}, or half maximal effective concentration, refers to the molar concentration of a drug that produces 50% of the maximal possible effect of that drug after a defined exposure time. It is an expression of the activity or potency of a drug, in terms of the concentration needed to produce a defined response.
IC_{50}, or inhibitory concentration, is the drug concentration required to block 50% of the production of either HBsAg, HBeAg or HBV DNA (50% inhibition). It is also the most common summary measure of the dose-response curve.
Fold resistance, or phenotypic resistance, is the extent at which the HBV multiplies in a test when antiviral drugs are added. The growth rate of HBV is compared to the rate of wild type virus. If the sample grows more than normal, it is resistant to the antiviral drug.
We searched for in vivo and in vitro studies comparing the efficacy of tenofovir in nucleos(t)ide naïve population with that in lamivudine resistant population.
A total of five in vitro studies (of which one is an abstract) were identified and included in this review. No in vivo studies were identified.
In vitro studies that did not compare lamivudine resistant HBV DNA strains with wild type were excluded from this review.

J.7.2.1 Summary characteristics of included studies

In vitro studies

Table 97: Summary characteristics of included studies

Included studies Study design	HBV mutants	Outcomes
Delaney WE et al. 2006 In vitro study	1. Wild type 2. rtL180M +rtM204V 3. rtA194T+ rtL180M +rtM204V	1. EC_{50} concentration (µM) 2. Fold resistance – ratio of the mutant EC_{50} and the wild type EC_{50}
Yang H et al. 2005 In vitro study	1. Wild type 2. rtL180M +rtM204V 3. rtV173L+ rtL180M +rtM204V 4. rtM204V 5. rtL180M +rtM204I	1. EC_{50}* concentration (µM) 2. Fold resistance - ratio of the mutant EC_{50} and the wild type EC_{50}
Lada O et al. 2004 In vitro study	1. Wild type 2. rtL180M +rtM204V	1. IC_{50} concentration (µM) of HBsAg, HBeAg and HBV DNA 2. Fold resistance – ratio of the mutant IC_{50} and the wild type IC_{50}
Brunelle M et al. 2005 In vitro study	1. Wild type 2. rtL180M +rtM204V 3. rtL180M +rtM204V + N236T	1. IC_{50} concentration (µMol/L) 2. Fold resistance
Zhu Y et al. 2011 In vitro study	1. Wild type 2. rtL180M +rtM204V 3. rtA194T+ rtL180M +rtM204V	1. EC50 concentration (µM) 2. Fold resistance

**EC50, calculated by nonlinear regression of antiviral data generated by qPCR analysis of HBV DNA in treated wild type 42 cells*

J.7.2.2 Comparative efficacy of tenofovir in nucleos(t)ide naïve and lamivudine resistant population

In vitro studies

Delaney WE et al. 2006

Wild type, lamivudine resistant HBV strain (rtL180M/M204V), and rtA194T + rtL180M/M204V were obtained from HepG2 cells (2.2.15 cell line). For wild type virus, tenofovir and adefovir had similar antiviral activities in 2.2.15 cells – EC_{50} of 1.1 vs. 0.8 respectively (table 3).

Table 98: Anti-HBV activities of tenofovir and other anti-viral drugs in Hep G2 2.2.15 cell line

Drug	EC_{50} (µM)	n
Tenofovir	1.1± 0.3	5
Adefovir	0.8 ± 0.2	3
Lamivudine	0.06 ± 0.01	3

The study suggested that the rtL180M/M204V mutations resulted in a 2.1 fold increase in the EC_{50} for tenofovir (tabe 4). The addition of rtA194T to the double lamivudine resistant mutants (rtA194T + rtL180M/M204V) did not significantly change the susceptibility of the virus to tenofovir compared to the double lamivudine resistant mutants (rtL180M/M204V).

Table 99: In vitro susceptibilities of wild type, rtL180M + rtM204V and rtA194T + rtL180M + rtM204V to tenofovir in a transient-cell based antiviral assay

HBV mutants	EC_{50} (µM), mean ± SD*	n	Fold resistance
Wild type	0.13 ± 0.043	5	1.0
rtL180M + rtM204V	0.27 ± 0.16	5	2.1
rtA194T + rtL180M + rtM204V	0.31 ± 0.041	4	2.4

**SD from the indicated number of experiments (n)*

Yang H et al. 2005

Cell lines (HepG2 cells) expressing HBV encoding the four major patterns of lamivudine resistance mutations were generated, including 1)rtL180M + rtM204V, 2) rtV173L + rtL180M + rtM204V, 3) rtM204I and 4) rtL180M + rtM204I. The susceptibility of all four strains of lamivudine-resistant HBV to nucleos(t)ides was assessed.

Table 5 suggests that tenofovir had the highest efficacy against wild-type HBV, compared to other nucleos(t)ides. Table 6 shows that all four lamivudine resistant HBV strains were sensitive to tenofovir (low fold-resistance).

Table 100: EC_{50} values for nucleos(t)ide analogues against wild-type HBV

	EC_{50} (µM)*
Adefovir	0.55 ±0.30
Tenofovir	0.77 ±0.34
Entecavir	0.001 ±0003
Lamivudine	0.06 ±0.02

**Values represent mean (SD) of two or more independent experiments performed in triplicate.*

Table 101: Fold resistance of nucleos(tide) analogues to HBV encoding the major lamivudine resistance mutations

	Fold resistance (calculated as the ratio of mutant EC_{50} to wild type EC_{50})			
Drug	L180M +M204V	V173L+L180M + M204V	M204I	L180M + M204I

	Fold resistance (calculated as the ratio of mutant EC_{50} to wild type EC_{50})			
Tenofovir	0.8	1.8	2.1	0.7
Adefovir	1.1	1.1	1.8	2.1
Entecavir	37	164	471	38
Lamivudine	>700	>1000	>1000	>1000

Lada O et al. 2004

Wild type and lamivudine resistant HBV strain (rtL180M/M204V) were obtained from HepG2 cells. Results suggested that lamivudine showed the highest potency to decrease HBsAg and HBeAg production with a calculated inhibitory concentration (IC_{50}) between 0.004 and 0.01µM for wild type HBV. There was almost no efficacy of lamivudine on the double rtL180M and rtM204V mutations and IC_{50} increased by a factor over 10,000 (table 7). Tenofovir and adefovir had similar IC_{50} (around 0.05) on wild type HBV. Lamivudine resistant mutations induced a small increase of tenofovir IC_{50}. A 3.3 fold (from 0.06 to 0.2µM) increase indicates a mild decrease of tenofovir activities in vitro.
The study also examined sensitivity of mutant with the triple lamivudine-resistant residue changes rtV173L/L180M/M204V. At the concentration of 0.1 µM antivirals, all drugs including lamivudine, and tenofovir were highly active on wild type virus HBsAg production with an average inhibition of 65%. Almost no inhibition of lamivudine (<10%) was observed in terms of HBsAg production from the double rtL180M/M204V variants, independently of the presence of the additional rtV173L change. Tenofovir activity was not affected by the additional rtV173L change, with 60% inhibition of HBsAg production and 45% inhibition of viral replication at 0.1µM.
The study supported the high efficacy of tenofovir seen in patients after lamivudine breakthrough.

Table 102: Antiviral drug efficacy on wild type and lamivudine resistant HBV*

	IC_{50} (µM)						
	Wild type			rtM204V+L180M			Mutant/wild type IC50 ratio*
	HBsAg	HBeAg	HBV DNA	HBsAg	HBeAg	HBV DNA	
Tenofovir	0.05	0.05	0.06	0.07	0.09	0.2	3.3
Lamivudine	0.01	0.004	0.006	>100	>100	>100	>16000
Adefovir	0.05	0.04	0.07	0.1	0.07	0.2	2.85

**Values represent the mean of three independent experiments.*

Brunelle M et al. 2005

The study investigated HBV strains carrying mutations conferring resistance to lamivudine (L180M + M204V) and the combination of lamivudine and adefovir mutations (L180M + M204V + N236T). The effects on the replication of the HBV genome and the susceptibility to nucleos(t)ide analogues including tenofovir was assessed in transiently transfected hepatoma cell lines (Huh7 cells).
Results in table 8 suggested that 100µmol/L tenofovir reduced the viral DNA synthesis level of wild type HBV and L180M + M240V by more than 80% and 40%, respectively. The replication of the triple mutant (L180M + M240V + N236T) was reduced by 70.8% with tenofovir.

Table 103: In vitro efficacy of tenofovir to inhibit the genome replication of HBV, in wild type and mutant HBV

		Inhibition of the replication compared with no drug (%)		
	Tested dose	Wild type	L180M + M204V	L180M + M204V + N236T
Tenofvir	100µmol/L	82.3±1.3	43.9±7.2	70.8±7.4

The IC_{50} of tenofovir were determined by treating transiently transfected Huh7 with increasing drug concentrations ranging from 0 to 200µmol/L for tenofovir. A 3.4 fold resistance was observed for the L180M + M204V mutant compared with wild type HBV with an IC_{50} of 35.2µmol/L and a 4.4 fold resistance for the triple mutant (table 9).

Table 104: Susceptibility of wild type and mutant HBV to tenofovir

	Tenofovir	
	IC_{50} (µmol/L)*	Fold resistance**
Wild type	10.3 ± 1.3	1
L180M + M204V	35.2 ± 5.1	3.4
L180M + M204V + N236T	45.5 ± 6.1	4.4

**Values represent the mean of at least 3 independent experiments, each performed in duplicate.*
***Fold resistance = (mutant IC_{50})/ (wt IC_{50})*

Zhu Y et al. 2011

This study used an HBV genotype D strain for which both precore and basal core promoter mutations exist naturally in vivo to analyse the effects of these mutations on HBV DNA replication as well as resistance to tenofovir and lamivudine. None of the tested constructs had EC_{50} value fold changes >2-fold, which is the upper limit of our assay variation for detection of resistance (table 10). L180M+M204V and L180M+M204V+A194T in wild type, precore and basal core promoter genome backbones were fully susceptible to tenofovir.

Table 105: Susceptibility of wild type and mutant HBV to tenofovir and lamivudine

	Tenofovir		Lamivudine	
	EC_{50} (µmol/L)	Fold over backbone	EC_{50} (µmol/L)	Fold over backbone
Wild type (Wt)	12.5±3.8	1.0	3.3±1.6	1.0
Wt-L180M + M204V	15.8±5.3	1.3	>100	>30
Wt-L180M + M204V + A194T	14.9±4.2	1.5	>100	>25
PC*-L180M + M204V	14.1±3.6	1.4	>100	>50
PC-L180M + M204V + A194T	8.7±3.4	0.8	>100	>37
BCP**-L180M + M204V	13.9±9.2	1.6	>100	>38
BCP-L180M + M204V + A194T	16.2±8.7	1.8	>100	>38

<u>Quality of in vitro studies</u>

All four studies used the mean of at least three independent experiments. Test, references (benchmark material) and control items have been appropriately characterised. Appropriate source of cell lines has been used. All studies have been designed to establish a concentration-effect (dose-response) relationship, i.e. a range of concentrations used was selected to increase the likelihood of detecting an effect on the test system. Appropriate outcomes were reported.

J.7.3 Evidence statements

J.7.3.1 Summary of evidence

All five in vitro studies suggested that lamivudine mutant strains (L180M+M204V) were susceptible to tenofovir, compared to wild type (no mutation).

Appendix K: Research recommendations

The Guideline Development Group has made the following recommendations for research, based on its review of evidence, to improve NICE guidance and patient care in the future.

K.1 Key future research recommendations

K.1.1 Stopping antiviral treatment in HBeAg negative disease

Further research should be undertaken to evaluate the clinical and cost effectiveness of HBsAg quantitative assays in determining treatment duration in HBeAg- negative disease.

Why this is important
In HBeAg-positive disease, HBeAg seroconversion is a predictor of durable response to antiviral treatment and can be used as a milestone after which treatment can be stopped. At present, similar parameters have not been defined in HBeAg-negative disease. Quantitative HBsAg may have a role in determining treatment duration in this setting. Establishing threshold levels for HBsAg titre associated with durable off-treatment control in HBeAg-negative disease would transform current treatment strategies. People on long-term nucleoside or nucleotide analogues could safely stop treatment once they achieved a threshold level of HBsAg. Further research is needed to define these levels of HBsAg and to determine when treatment in HBeAg-negative disease can be safely stopped.

K.1.2 ALT values for children and young people

Further research should be undertaken to examine whether the upper limit of normal ALT values for adults (<30 IU/ml for males and <19 IU/ml for females) are appropriate for use in children and young people with chronic hepatitis B when making decisions on when to initiate treatment.

Why this is important
Recent studies have highlighted the imprecision of using biochemical activity as a measure of immune activity in children and young people with chronic hepatitis B. Researchers have found T-cell exhaustion and even HBV-specific immune responses in children and young people considered to have immune-tolerant disease. These findings need to be validated in larger studies to see if upper limit of normal ALT values derived from adults accurately reflect disease activity in children and young people. Further research is needed to investigate whether there is a genuine state of immune tolerance in children and young people reflected in lower levels of biochemical activity and a lower upper limit of normal ALT value.

K.1.3 Long term safety of tenofovir disoproxil in chronic hepatitis B

Further research should be undertaken to determine the long-term safety of tenofovir disoproxil, including the risk of clinically significant hypophosphataemia and related bone toxicity, in people with chronic hepatitis B. The cost effectiveness of routine monitoring for phosphate loss and bone disease in people with chronic hepatitis B who are receiving tenofovir disoproxil treatment needs further evaluation.

Why this is important
Tenofovir disoproxil is recommended as an option for treatment of people with chronic hepatitis B, and is typically prescribed for long-term use. Kidney dysfunction has been reported in people treated with tenofovir disoproxil, including rare cases of proximal renal tubular dysfunction that appear related to long-term exposure but are not well understood. Adverse renal effects such as hypophosphataemia may have an impact on bone architecture which could result in clinical problems such as fragility fractures. Monitoring for phosphate loss and bone disease could have a role in preventing clinically significant bone problems in people with chronic hepatitis B receiving long-term tenofovir disoproxil. However, the cost effectiveness and clinical utility of routine monitoring needs to be established before recommendations can be made about its use.

K.1.4 Prophylactic treatment in people receiving immunosuppressive therapy

Further research should be undertaken to determine whether long-term use of mild immunosuppressive agents for autoimmune and allergic problems presents a risk for reactivation of HBV infection in people with previous or current chronic hepatitis B, including occult HBV infection. The cost effectiveness of routine tests for HBV in this population, including HBV DNA for occult HBV infection, and the need for prophylactic treatment with nucleoside or nucleotide analogues needs further evaluation.

Why this is important
Reactivation of HBV may occur spontaneously or arise during immunosuppression. Solid organ transplantation, chemotherapy and immunosuppressive drugs used to treat autoimmune diseases are key causes of HBV reactivation. Antiviral agents can be used as prophylaxis to prevent reactivation of HBV infection in people receiving immunosuppressive therapy but the optimal treatment and duration of therapy are unknown. Decision-making and cost-effectiveness studies are needed to determine optimal screening strategies to identify people at risk of HBV reactivation. People with occult HBV (including people coming from high endemicity regions) might carry a low, but not negligible, risk of viral reactivation. Prospective studies are needed to assess the risk of HBV reactivation in people receiving mild immunosuppressants or biological treatment for autoimmune diseases, to identify risk factors that predict HBV reactivation in this population, and evaluate treatment or pre-emptive strategies using existing nucleoside and nucleotide analogues.

Appendix L: Excluded clinical studies

L.1 Patient Information

Reference	Reason for exclusion
Leung 2009	Did not report outcome of interest (design of a tool)

Reference	Reason for exclusion
Giles 2006	Not hepatitis B (HCV and HIV)
Wai 2005B	Not related to review question
Nishimura 2012	Not related to review question – prevention

L.2 Settings

Reference	Reason for exclusion
Demir 2011	Non-UK setting
Upadhyaya 2009	Non-UK setting
Wallace 2011	Non-UK setting
Ferrante 2008	Non-UK setting
Sam 2011	Non-UK setting
Dec 2011	Non-UK setting
Haber 2009	Review
D'Souza 2004	Non-HBV population

L.3 Referral thresholds

Reference	Reason for exclusion
Bell 2010	Abstract
Cotler 2010	Not hepatitis B population
Zacharakis 2005	Not related to review question
Chotiyaputta 2011	Not related to review question
Koretz 1978	Not related to review question
Barcena 2009	Commentary
Jonas 2010	Review
De Francis 1993	Not related to review question
Lok 2000	Review
De Ledinghen	Not hepatitis B population
Maneis 2003	Not related to review question
Ikeda 2006	Not related to review question
Mansour 2010	Not related to review question
Chan 2000	Not related to review question
Martinot 2002	Not related to review question
Nguyen 2009	Not related to review question
Kim 2011A	Not related to review question
Assy 2009	Not related to review question
Kocak 1998	Not related to review question
Papatheodoridis 2008A	Not related to review question
Ijaz 2011	Not related to review question
Alam 2011	Not related to review question
Wong 2008	Not related to review question
Kitikomonkun 2012	Abstract
Yen-Cheng 2012	Abstract

L.4 Diagnostics

Reference	Reason for exclusion
Halfon 2008	Meta-analysis
Wang 2012	Not relevant to review question. Some patients did not undergo liver biopsy (proved by CT/clinical demonstrations).
Ito 1999	Not relevant to review question
Ito 1997	Not relevant to review question
Koinuma 2005	Did not report outcome of interest
Ito 1998	Did not report outcome of interest
Soylu 2010	Not relevant to review question
Hsu 2007	Did not use liver biopsy as reference standard
Goertz 2010	Not relevant to review question
Haque 2010	Not relevant to review question
Grgurevic 2011	Not relevant to review question
Degos 2010	Mixed population (22% HBV patients)
Myers 2010	Mixed population (27% HBV patients)
Mohamadnejad 2011	Not relevant to review question
Coco 2007	No. of HBV patients unknown
Wang 2009 B	Mixed population (27.5% HBV patients)
Friedrich 2010	Mixed population (14% HBV patients)
Poynard 2005A	Not relevant to review question
Foucher 2006	Mixed population (5.5% HBV patients)
Gou 2010	Did not report outcome of interest
Poynard 2008	Review
Lebensztejn 2005	Not relevant to review question
Anastasious 2010	Mixed population (HBV, n=7)
Park 2011	Multiple biomarkers not relevant to review question
Vardar 2009	Mixed population; did not report outcome of interest
Lee 2011B	Not fibrosis staging system included in the protocol
Lee 2010	Mixed population; not relevant to review question
Chen 2008A	Not relevant to review question
Wong 2008A	Mixed population (50% HBV patients)
Parisian 2010	Not relevant to review question
Montazeri 2005	Not relevant to review question
Tamano 2012	Not diagnostic test accuracy; HBV not reported separately
Kim 2010K	Superseded by Kim 2010B
Kim 2010E	Not fibrosis staging system included in the protocol
Kim 2010F	Not fibrosis staging system included in the protocol
Hongbo 2007	Not fibrosis staging system included in the protocol
Poynard 2005	Did not report outcome of interest
Parkes 2010	ELF test – mixed population (5% HBV)

L.5 Genotype testing

Reference	Reason for exclusion
Zollner 2004 Viral Features of Lamivudine Resistant Hepatitis B genotypes A and D	Mixed population with liver transplantation
Fung 2006 Virlogic response and resistance to adefovir in patients with chronic hepatitis B	Information was not provided on the outcome by genotype
Moskovitz 2005 Response to long term lamivudine treatment (up to 5 years) in patients with severe chronic hepatitis B, role of genotype and drug resistance	Information was not provided on the outcome by genotype
Huang 2005 Clinical characteristics and distribution of hepatitis B virus genotypes in Guangxi Zhuang population	Information was not provided on the outcome by genotype
Wai 2002 HBV Genotype B is associated with better response to Interferon therapy in HBeAg (+) chronic hepatitis than genotype C	Mixed population on treatment with drugs other than the one specified in our protocol (prednisone)
Furusyo 2002 Clinical outcomes of hepatitis B virus (HBV) genotypes B and C in Japanese patients with chronic HBV infection	The majority of patients included were off antiviral treatment
Hansen 2011 HBV DNA suppression in HBeAg-positive chronic hepatitis B patients treated with peginterferon or placebo	Information was not provided on the outcome by genotype
Yuen 2003 Significance of hepatitis B genotype in acute exacerbation, HBeAg seroconversion, cirrhosis- related complications and hepatocellular carcinoma	Patients off antiviral treatment
Dienstag 2003 Histological outcome during long term lamivudine therapy	Information was not provided on the outcome by genotype
Jardi 2008 Analysis of hepatitis B genotype changes in chronic hepatitis B infection: influence of antiviral therapy	Did not address our review question
Chu 2005 Genotype C hepatitis B virus infection is associated with a higher risk of reactivation of hepatitis B and progression to cirrhosis than genotype B: A longitudinal study of hepatitis B e antigen-positive patients with normal aminotransferase levels at baseline	Patients off antiviral treatment
Kao 2004 Hepatitis B Virus Genotypes and Spontaneous Hepatitis B e antigen seroconversion in Taiwanese Hepatitis B carriers	Patients off antiviral treatment
Thakur 2002 Profile, spectrum and significance of HBV genotypes in chronic liver disease patients in the Indian subcontinent	Patients off antiviral treatment
Yatsuji 2008 Low risk of adefovir resistance in lamivudine-resistant chronic hepatitis B patients treated with adefovir plus lamivudine combination therapy: two year follow up	Patients with one HBV genotype
Ni 2007 Viremia profiles in children with chronic hepatitis B virus infection and spontaneous e antigen seroconversion	Patients off antiviral treatment
Lampertico 2010 Chronic Liver injury and fibrosis	Abstract
Tsubota 2004 Benefit of lamivudine therapy and factors associated with clinical outcome in spontaneous severe acute exacerbation of chronic hepatitis B virus infection	Information was not provided on the outcome by genotype
Tsubota 2004 Severe acute exacerbation of liver disease may reduce or delay emergence of YMDD motif mutants in long-term lamivudine therapy for hepatitis e antigen positive chronic hepatitis B	Patients with one HBV genotype
Chen 2007 Clinical significance and evolution of core promoter and	Patients off antiviral

Reference	Reason for exclusion
precore mutations in HBeAg positive patients with HBV genotype B and C: a longitudinal study	treatment
Sakai 2002 Efficacy of long term interferon therapy in chronic hepatitis B patients with HBV genotype C	Patients off antiviral treatment
Akuta 2006 Virological outcomes in patients infected chronically with hepatitis B virus genotype A in comparison with genotypes B and C	Outcomes not related to response to antiviral treatment
Sunbul 2005 Distribution of hepatitis B virus genotypes in patients with chronic hepatitis B in Turkey	Epidemiological paper, not treatment related.
Medici 2006 HBV genotypes and antiviral-resistant variants in HBV infected subjects in Northern Italy	Patients with one HBV genotype
Enomoto 2007 Lamivudine and IFN-B sequential therapy in HBe-Antigen positive patients with chronic hepatitis B virus genotype C infection	Patients with one HBV genotype
Chen 2006 Genetic structural differences between responders and non responders to interferon therapy for chronic hepatitis B patients	Did not address our review question
Amini-Bavil-Olyaee 2008 Hepatitis B virus (HBV) genotype and YMDD motif mutation profile among patients infected with HBV and untreated with lamivudine	Patients with one HBV genotype
Keating 2009 Peginterferon alpha 2a	Literature review
Senturk 2011 Long term effect of interferon therapy in patients with HBeAg positive chronic hepatitis B infection	Patients with one HBV genotype
Jang 2007 A 13 year old longitudinal study of the impact of double mutations in the core promoter region of hepatitis B virus on HBeAg seroconversion and disease progression in patients with genotype C chronic active hepatitis	Patients with one HBV genotype
Bielawski 2001Molecular epidemiology of chronic hepatitis B virus infection in northern Poland	Epidemiological paper, not treatment related.
Yilmaz 2007 Long term conventional interferon alpha in combination with lamivudine for chronic hepatitis B: data from Turkey	Patients with one HBV genotype

L.6 Antiviral treatments

L.6.1 Pharmacological treatment in adults

Reference	Reason(s) for exclusion
Ali HY. Trial of lamivudine in hepatitis B surface antigen carriers with persistent hepatitis B core IgM antibody. Saudi Medical Journal 2003 Sep;24:996-9. Ref ID: ALI2003	Acute infection.
Arase Y, Tsubota A, Saitoh S, et al. Randomized, controlled trial of natural interferon-alpha therapy for e-antigen-positive chronic haptitis B people. Hepatology Research 2002;23:98-104. Ref ID: ARASE2002	Dose-ranging trial of IFN-alpha.
Barclay S, Pol S, Mutimer D, et al. The management of chronic hepatitis B in the immunocompromised patient: recommendations from a single topic meeting. J Clin Virol 2008 Apr;41:243-54. Ref ID: BARCLAY2008	Meeting report.
Bell SJ, Lau A, Thompson A, et al. Chronic hepatitis B: recommendations for therapy based on the natural history of disease in Australian people. J Clin Virol 2005 Feb;32:122-7.	Guideline.

Reference	Reason(s) for exclusion
Ref ID: BELL2005	
Bozkaya H, Yurdaydin C, Idilman R, et al. Lamivudine treatment in HBeAg-negative chronic hepatitis B people with low level viraemia. Antiviral Therapy 2005;10:319-25. Ref ID: BOZKAYA2005	N<50. Not RCT.
Buster EH, Flink HJ, Simsek H, et al. Early HBeAg loss during peginterferon alpha-2b therapy predicts HBsAg loss: results of a long-term follow-up study in chronic hepatitis B people. Am J Gastroenterol 2009 Oct;104:2449-57. Ref ID: BUSTER2009	Follow up study – predictors of response (peg-IFN-alpha-2b)
Buti M. Is telbivudine superior to lamivudine for the treatment of people with chronic hepatitis B? Nature Clinical Practice Gastroenterology and Hepatology 2008;5:494-5. Ref ID: BUTI2008A	Commentary.
Carreno V, Marcellin P, Hadziyannis S, et al. Retreatment of chronic hepatitis B e antigen-positive people with recombinant interferon alfa-2a. Hepatology 1999 Jul;30:277-82. Ref ID: CARRENO1999	Did not have two groups with treatments of interest. IFN vs. no therapy.
Chang TT, Lai CL, Kew YS, et al. Entecavir treatment for up to 5 years in people with hepatitis B e antigen-positive chronic hepatitis B. Hepatology 2010 Feb;51:422-30. Ref ID: CHANG2010	Open-label trial of ETV from 10 phase II/III studies.
Chen EQ, Zhou TY, Liu L, et al. A comparison of treatment with adefovir and entecavir for chronic hepatitis B in China: the 2-year results of a prospective study. Hepatitis Monthly 2011;11:27-32. Ref ID: CHEN2011A	Not RCT.
Chen CH, Wang JH, Lu SN, et al. Treatment response and evolution of HBV resistance during lamivudine plus adefovir or entecavir therapy in patients with adefovir-resistant mutants. Antiviral Therapy 2012;17:701-9	Not RCT.
Chung YH, Song BC, Lee GC, et al. Individualization of interferon therapy using serum hepatitis B virus DNA to reduce viral relapse in people with chronic hepatitis B: a randomized controlled trial. Eur J Gastroenterol Hepatol 2003 May;15:489-93. Ref ID: CHUNG2003	Not RCT.
Cooksley WG, Piratvisuth T, Lee SD, et al. Peginterferon alpha-2a (40 kDa): an advance in the treatment of hepatitis B e antigen-positive chronic hepatitis B. J Viral Hepat 2003 Jul;10:298-305. Ref ID: COOKSLEY2003	Dose-ranging trial of IFN.
Cornberg M, Protzer U, Dollinger MM, et al. The German guideline for the management of hepatitis B virus infection: short version. J Viral Hepat 2008 Aug;15:1-21. Ref ID: CORNBERG2008	German guideline.
Craxi A, Cooksley WG. Pegylated interferons for chronic hepatitis B. Antiviral Res 2003 Oct;60:87-9. Ref ID: CRAXI2003A	Commentary.
de Ledinghen V, Wong VWS, Vergniol J et al. Diagnosis of liver fibrosis and cirrhosis using liver stiffness measurement: comparison between M and XL probe of FibroScan®. J Hepatol 2012; 56: 833-839. Ref ID: DELEDINGHEN2012	Most patients did not have hepatitis B.
de Man RA, Wolters LM, Nevens F, et al. Safety and efficacy	Dose-ranging trial of ETV. N<50.

Reference	Reason(s) for exclusion
of oral entecavir given for 28 days in people with chronic hepatitis B virus infection. Hepatology 2001 Sep;34:578-82. Ref ID: DEMAN2001	
Dienstag JL, Perrillo RP, Schiff ER, et al. A preliminary trial of lamivudine for chronic hepatitis B infection. N Engl J Med 1995 Dec 21;333:1657-61. Ref ID: DIENSTAG1995	Dose-ranging trial of LAM.
Dienstag JL, Schiff ER, Mitchell M, et al. Extended lamivudine retreatment for chronic hepatitis B: maintenance of viral suppression after discontinuation of therapy. Hepatology 1999 Oct;30:1082-7. Ref ID: DIENSTAG1999A	Not RCT. Open label extended LAM retreatment. N<50.
Enomoto M, Tamori A, Kohmoto MT, et al. Optimal duration of additional therapy after biochemical and virological responses to lamivudine in people with HBeAg-negative chronic hepatitis B: a randomized trial. Hepatology Research 2008 Sep;38:954-9. Ref ID: ENOMOTO2008	Duration related response (LAM)
Eun JR, Lee HJ, Lee HL. The effect of lamivudine and adefovir dipivoxil on preventing hepatocellular carcinoma in hepatitis B virus-related liver cirrhosis. Hepatology 2007;46:664A-5A. Ref ID: EUN2007	Abstract.
Eun MJ, Seong GH, Chang KH, et al. Lamivudine and interferon alpha combination treatment in people with chronic hepatitis B. Journal of Korean Society for Clinical Pharmacology and Therapeutics 2000;8:72-9. Ref ID: EUN2000	Published in foreign language.
Ferraioli G. Performance of real-time strain elastography, shear wave elastography, and transient elastography in assessing significant fibrosis in chronic viral hepatitis. EASL abstract. Ref ID:FERRAIOLI2012	Abstract.
Gilson RJ, Chopra KB, Newell AM, et al. A placebo-controlled phase I/II study of adefovir dipivoxil in people with chronic hepatitis B virus infection. J Viral Hepat 1999 Sep;6:387-95. Ref ID: GILSON1999	N<50. Phase I/II study. ADV vs. placebo.
Gish RG, Trinh H, Leung N, et al. Safety and antiviral activity of emtricitabine (FTC) for the treatment of chronic hepatitis B infection: a two-year study. J Hepatol 2005 Jul;43:60-6. Ref ID: GISH2005A	Did not have two groups with treatments of interest.
Gish RG, Lau DT, Schmid P, et al. A pilot study of extended duration peginterferon alfa-2a for people with hepatitis B e antigen-negative chronic hepatitis B. Am J Gastroenterol 2007 Dec;102:2718-23. Ref ID: GISH2007	N<50. Peg-IFN-a2a + LAM vs. Peg-IFN-a2a.
Hadziyannis SJ, Tassopoulos NC, Heathcote EJ, et al. Long-term therapy with adefovir dipivoxil for HBeAg-negative chronic hepatitis B. N Engl J Med 2005 Jun 30;352:2673-81. Ref ID: HADZIYANNIS2005	Did not have two groups with treatments of interest [all groups received ADV at different time points during the trial].
Heathcote EJ, Gane AJ, Deman RA, et al. Two year tenofovir disoproxil fumarate (TDF) treatment and adefovir dipivoxil (ADV) switch data in HBeAg-positive people with cepatitis B (Study 103), preliminary analysis. Hepatology 2008;48:376A. Ref ID: HEATHCOTE2008A	Abstract.

Reference	Reason(s) for exclusion
Heathcote J, George J, Gordon S, et al. Tenofovir disoproxil fumarate (TDF) for the treatment of HBeAg positive chronic hepatitis B: week 72 TDF data and week 24 adefovir dipivoxil switch data (study 103). J Hepatol 2008;48:S32. Ref ID: HEATHCOTE2008	Abstract.
Heathcote EJ, Marcellin P, Buti M et al. Three-year efficacy and safety of tenofovir disoproxil fumarate treatment for chronic hepatitis B. Gastroenterology 2011; 140: 132-143. Ref ID: HEATHCOTE2011	Not RCT.
Hope RL, Weltman M, Dingley J, et al. Interferon alfa for chronic active hepatitis B. Long term follow-up of 62 people: outcomes and predictors of response. Med J Aust 1995 Jan 2;162:8-11. Ref ID: HOPE1995	Long term follow up study of IFN-alpha.
Hou J, Sun J, Xie Q, et al. Efficacy and safety of peginterferon alfa-2a versus adefovir dipivoxil (ADV) in treating lamivudine resistant HBeAg positive CHB: an interim analysis of a prospective randomized study. Hepatology 2008;48:745A. Ref ID: HOU2008	Abstract.
Hou J, Sun J, Xie Q, et al. Virological breakthrough and genotypic resistance in a randomized, controlled study on telbivudine treatment applying roadmap concept in CHB: W76 interim analysis of EFFORT study. EASL abstract Ref ID:HOU2012	Abstract.
Huang YH, Hong YC, Hsoao LT et al. Randomized controlled trial of prophylactic entecavir in HBsAg-negative/Anti-HBc positive lymphoma patients undergoing rituximab-based chemotherapy: preliminary report. EASL abstract 2012 Ref ID:HUANG2012	Not our population; abstract only.
Hyun JJ, Seo YS, Yoon E et al. Comparison of the efficacies of lamivudine versus entecavir in patients with hepatitis B virus-related decompensated cirrhosis. Liver Int 2012; 656-664. Ref ID:Hyun2012	Not randomised.
Izzedine H, Hulot JS, Launay-Vacher V, et al. Renal safety of adefovir dipivoxil in people with chronic hepatitis B: two double-blind, randomized, placebo-controlled studies. Kidney Int 2004 Sep;66:1153-8. Ref ID: IZZEDINE2004	Did not include outcomes specified in protocol.
Jaboli MF, Fabbri C, Liva S, et al. Long-term alpha interferon and lamivudine combination therapy in non-responder people with anti-HBe-positive chronic hepatitis B: results of an open, controlled trial. World Journal of Gastroenterology 2003 Jul;9:1491-5. Ref ID: JABOLI2003	Not RCT (IFN and LAM combination).
Jang HW, Kim SU, Park JY et al. How many valid measurements are necessary to assess liver fibrosis using FibroScan® in patients with chronic viral hepatitis? An analysis of subjects with at least 10 valid measurements. Yonsei Med J 2012; 53: 337-345. Ref ID:JANG2012	Not all patients had hepatitis B.
Janssen HL, Gerken G, Carreno V, et al. Interferon alfa for chronic hepatitis B infection: increased efficacy of prolonged treatment. Hepatology 1999 Jul;30:238-43. Ref ID: JANSSEN1999	Did not have two groups with treatments of interest. IFN vs. no therapy.

Reference	Reason(s) for exclusion
Jin H, Pan N, Mou Y, et al. Long-term effect of interferon treatment on the progression of chronic hepatitis B: Bayesian meta-analysis and meta-regression. Hepatology Research 2011 Jun;41:512-23. Ref ID: JIN2011	Meta-analysis of IFN (vs. placebo).
Jin W, Lin Z, Xin Y et al. Diagnostic accuracy of the aspartate aminotransferase-to-platelet ratio index for the prediction of hepatitis B-related fibrosis: a leading meta-analysis. BMC Gastroenterol 2012; 12: 14. Ref ID:JIN2012	Not RCT.
Jung YK, Yeon JE, Lee KG et al. Virologic response is not durable after adefovir discontinuation in lamivudine-resistant chronic hepatitis B patients. Korean J Hepatol 2011: 17: 261-267. Ref ID:JUNG2011	Not RCT
Karino Y, Toyota J, Kumada H, et al. Efficacy and resistance of entecavir following 3 years of treatment of Japanese people with lamivudine-refractory chronic hepatitis B. Hepatology International 2010;4:414-22. Ref ID: KARINO2010	Dose-ranging trial of ETV.
Khungar V, Han S-H. A systematic review of side effects of nucleoside and nucleotide drugs used for treatment of chronic hepatitis B. Current Hepatitis Reports 2010;9:75-90. Ref ID: KHUNGAR2010	Systematic review.
Kim YJ, Kim BG, Jung JO, et al. High rates of progressive hepatic functional deterioration whether lamivudine therapy is continued or discontinued after emergence of a lamivudine-resistant mutant: a prospective randomized controlled study. J Gastroenterol 2006 Mar;41:240-9. Ref ID: KIM2006	Did not have two groups with treatments of interest (continued vs. discontinued LAM therapy).
Kim SU, Kim JK, Park YN, Han KH. Discordance between liver biopsy and FibroScan®in assessing liver fibrosis in chronic hepatitis B: risk factors and influence of necroinflammation. PLoS ONE 7(2): e32233. doi:10.1371/journal.pone.0032233 Ref ID:KIM2012C	Not outcome of interest.
Kobashi H, Takaguchi K, Ikeda H, et al. Efficacy and safety of entecavir in nucleoside-naive, chronic hepatitis B people: phase II clinical study in Japan. J Gastroenterol Hepatol 2009 Feb;24:255-61. Ref ID: KOBASHI2009	Dose-ranging trial of ETV. Phase II.
Kobayashi M, Suzuki F, Akuta N, et al. Loss of hepatitis B surface antigen from the serum of people with chronic hepatitis treated with lamivudine. J Med Virol 2007 Oct;79:1472-7. Ref ID: KOBAYASHI2007	Not RCT.
Krogsgaard K. The long-term effect of treatment with interferon-alpha 2a in chronic hepatitis B. J Viral Hepat 1998 Nov;5:389-97. Ref ID: KROGSGAARD1998	Did not have two groups with treatments of interest (IFNa2a vs. placebo)[20].
Lada O, Gervais A, Branger M et al. Quasispecies analysis and in vitro susceptibility of HBV strains isolated from HIV-HBV-coinfected pateitns with delayed response to tenofovir. Antiviral Ther 2012; 17: 61-70. Ref ID:LADA2012A	Not relevant to review.
Lai CL, Ching CK, Tung AKM et al. Lamivudine is effective in	4 weeks treatment only – not

Reference	Reason(s) for exclusion
suppressing hepatitis B virus DNA in Chinese hepatitis B surface antigen carrier: a placebo-controlled trial. Hepatology 1997; 25: 241-244. Ref ID: LAI1997	clinically relevant
Lai CL, Rosmawati M, Lao J, et al. Entecavir is superior to lamivudine in reducing hepatitis B virus DNA in people with chronic hepatitis B infection. Gastroenterology 2002 Dec;123:1831-8. Ref ID: LAI2002	Phase II study. Dose-ranging trial.
Lai CL, Lim SG, Brown NA, et al. A dose-finding study of once-daily oral telbivudine in HBeAg-positive people with chronic hepatitis B virus infection. Hepatology 2004 Sep;40:719-26. Ref ID: LAI2004	Dose-ranging trial of telbivudine.
Lampertico P, Del NE, Manzin A, et al. A randomized, controlled trial of a 24-month course of interferon alfa 2b in people with chronic hepatitis B who had hepatitis B virus DNA without hepatitis B e antigen in serum. Hepatology 1997 Dec;26:1621-5. Ref ID: LAMPERTICO1997	Mixed population (with/without cirrhosis). N<50.
Lampertico P. Entecavir versus lamivudine for HBeAg positive and negative chronic hepatitis B. J Hepatol 2006;45:457-60. Ref ID: LAMPERTICO2006	Abstract.
Lim SG, Ng TM, Kung N, et al. A double-blind placebo-controlled study of emtricitabine in chronic hepatitis B. Arch Intern Med 2006 Jan 9;166:49-56. Ref ID: LIM2006B	Did not have two groups with treatments of interest.
Lim SG, Marcellin P, Tassopoulos N, et al. Clinical trial: effects of adefovir dipivoxil therapy in asian and caucasian people with chronic hepatitis B. Aliment Pharmacol Ther 2007 Nov 15;26:1419-28. Ref ID: LIM2007	Subgroup analysis from two trials, one of which has been included in this review (Marcellin 2003).
Lok ASF. Evolution of nucleoside/tide analogues for hepatitis B: is the ideal drug here yet? J Hepatol 2009;51:416-8. Ref ID: LOK2009	Commentary.
Lok AS, Lai CL, Leung N, et al. Long-term safety of lamivudine treatment in people with chronic hepatitis B. Gastroenterology 2003 Dec;125:1714-22. Ref ID: LOK2003	Retrospective analysis.
Lutz HH, Trautwein C. Reviving pegylated interferon as a therapeutic agent for hepatitis D: no more room for nucleos(t)ides? Hepatology 2011 Jun;53:2131-3. Ref ID: LUTZ2011	Commentary.
Manns M, Berg T, Moller B, et al. Week 168 tenofovir DF (TDF) versus emtricitabine + TDF (FTC/TDF) in viremic people receiving adefovir dipivoxil for chronic hepatitis B (CHB). Hepatology International 2011;5:1-12. Ref ID: MANNS2011	Abstract.
Marcellin P, Chang TT, Lim SG, et al. Long-term efficacy and safety of adefovir dipivoxil for the treatment of hepatitis B e antigen-positive chronic hepatitis B. Hepatology 2008 Sep;48:750-8. Ref ID: MARCELLIN2008A	Did not give outcomes in each group.
Marcellin P, Heathcote EJ, Buti M, et al. Four year efficacy and safety of tenofovir df treatment in HBeAg-negative and	Abstract.

Reference	Reason(s) for exclusion
HBeAg-positive people with chronic hepatitis B (CHB). Hepatology International 2011;5:128. Ref ID: MARCELLIN2011	
Marcellin P, Heathcote EJ, Berg T et al. Effects of tenofovir disoproxil fumarate (TDF) on renal function in chronic HBV patients in three global randomized studies. J Gastroenterol Hepatol 2001; 26 Suppl. 4: 93-108. Ref ID:MARCELLIN2011B	Abstract.
Marotta P, Lucas K. Management of hepatitis B: a longitudinal national survey. Impact of the Canadian Hepatitis B Consensus Guidelines. Can J Gastroenterol 2010 Sep;24:537-42. Ref ID: MAROTTA2010	Guideline.
Mazella G, Saracco G, Festi D, et al. Long-term results with interferon therapy in chronic type B hepatitis: a prospective randomized trial. Am J Gastroenterol 1999; 94: 2246-2250 Ref ID: MAZELLA1999	Did not have two groups with treatments of interest. IFN vs. no therapy.
Minde Z, Yimin M, Guangbi Y et al. Five years of treatment with adefovir dipivoxil in Chinese patients with HBeAg-positive chronic hepatitis B. Liver Int 2012; 137-146. Ref ID:MINDE2012	Not RCT
Miyake Y, Kobashi H, Yamamoto K. Meta-analysis: the effect of interferon on development of hepatocellular carcinoma in people with chronic hepatitis B virus infection. J Gastroenterol 2009;44:470-5. Ref ID: MIYAKE2009	Did not have two groups with treatments of interest. IFN vs. no therapy.
Monif T, Reyar S, Tiwari HK, et al. A single-dose, randomized, open-label, two-period crossover bioequivalence study comparing a fixed-dose pediatric combination of lamivudine and stavudine tablet for oral suspension with individual liquid formulations in healthy adult male volunteers. Drug Research (Arzneimittel-Forschung) 2009;59:104-8. Ref ID: MONIF2009	Did not have two groups with treatments of interest.
Morisco F, Castiglione F, Rispo A et al. Hepatitis B infectgion and immunosuppressive therapy in patients with iinflammatory bowel disease. Digestive and Liver Disease 2011; 43S: S40-S48. Ref ID:MORISCO2011	Review
Nevens F, Main J, Honkoop P, et al. Lamivudine therapy for chronic hepatitis B: a six-month randomized dose-ranging study. Gastroenterology 1997 Oct;113:1258-63. Ref ID: NEVENS1997	Dose-ranging trial of LAM.
Ormeci N, Bolukbas F, Erden E et al. Pegylated interferon alfa-2B for chronic delta hepatitis: 12 versus 24 months. Hepato-Gastroenterology 2011; 58: 1648-1653. Ref ID:ORMECI2011	Delta hepatitis not hepatitis B
Piratvisuth T, Marcellin P, Lau G, et al. ALT flares and sustained ALT response in people with HBeAg-negative chronic hepatitis B treated with peginterferon alfa-2a (40KD) (PEGASYS), peginterferon alfa-2A (40KD) plus lamivudine or lamivudine alone. Hepatology 2004;40:656A-7A. Ref ID: PIRATVISUTH2004	Abstract.
Pradeep KS, Medhi S, Asim M, et al. Evaluation of adefovir and lamivudine in chronic hepatitis B: correlation with HBV viral kinetic, hepatic-necro inflammation and fibrosis. Indian J	N<50. Randomised pilot study.

Reference	Reason(s) for exclusion
Med Res 2011 Jan;133:50-6. Ref ID: PRADEEP2011	
Reijnders JG, Rijckborst V, Sonneveld MJ, et al. Kinetics of hepatitis B surface antigen differ between treatment with peginterferon and entecavir. J Hepatol 2011 Mar;54:449-54. Ref ID: REIJNDERS2011	Group matching analysis from three different trials.
Rodriguez-Inigo E, Bartolome J, Lopez-Alcorocho JM, et al. Activation of liver disease in healthy hepatitis B surface antigen carriers during interferon-alpha treatment. J Med Virol 1997 Sep;53:76-80. Ref ID: RODRIGUEZINIGO1997	Did not have two groups with treatments of interest. IFN-alpha vs. controls. N<50 people.
Safadi R, Xie Q, Chen Y, et al. A randomized trial of switching to telbivudine versus continued lamivudine in adults with chronic hepatitis B: results of the primary analysis at week 24. J Hepatol 2007;46 (Suppl.1):S196-S197. Ref ID: SAFADI2007	Abstract.
Shepherd J, Jones J, Takeda A, et al. Adefovir dipivoxil and pegylated interferon alfa-2a for the treatment of chronic hepatitis B: a systematic review and economic evaluation. Health Technol Assess 2006;10:1-183. Ref ID: SHEPHERD2006	HTA summary study.
Shindo M, Chayama K, Mochida S, et al. Antiviral activity, dose response relationship, and safety of entecavir following 24-week oral dosing in nucleoside-naive Japanese adult people with chronic hepatitis B: a randomized, double-blind, phase II clinical trial. Hepatology International 2009;3:445-52. Ref ID: SHINDO2009	Dose-ranging trial of ETV.
Singal AK, Fontana RJ. Meta-analysis: oral anti-viral agents in adults with decompensated hepatitis B virus cirrhosis. Aliment Pharmacol Ther 2012; 35: 674-689. Ref ID:SINGAL2012	Not RCT.
Sokal EM, Roberts EA, Mieli-Vergani G, et al. A dose ranging study of the pharmacokinetics, safety, and preliminary efficacy of lamivudine in children and adolescents with chronic hepatitis B. Antimicrob Agents Chemother 2000 Mar;44:590-7. Ref ID: SOKAL2000	Dose-ranging trial of LAM in children.
Sun J, Hou JL, Xie Q, et al. Randomised clinical trial: efficacy of peginterferon alfa-2a in HBeAg positive chronic hepatitis B people with lamivudine resistance. Aliment Pharmacol Ther 2011;34:424-31. Ref ID: SUN2011	Dose-ranging trial of IFN.
Suzuki F, Toyoda J, Katano Y, et al. Efficacy and safety of entecavir in lamivudine-refractory people with chronic hepatitis B: randomized controlled trial in Japanese people. J Gastroenterol Hepatol 2008;23:1320-6. Ref ID: SUZUKI2008	Dose ranging study.
Tamori A, Koike T, Goto H, et al. Prospective study of reactivation of hepatitis B virus in people with rheumatoid arthritis who received immunosuppressive therapy: evaluation of both HBsAg-positive and HBsAg-negative cohorts. J Gastroenterol 2011 Apr;46:556-64. Ref ID: TAMORI2011	Not RCT.
Tassopoulos NC, Papatheodoridis GV, Vafiadou I, et al. Efficacy of different doses of 12-month interferon alfa therapy in people with HBeAg negative chronic hepatitis B: a	Dose-ranging trial of IFN-alpha.

Reference	Reason(s) for exclusion
randomized trial. Annals of Gastroenterology 2006;19:335-41. Ref ID: TASSOPOULOS2006	
Tsai N, Gane E, Weilert F et al. Five years of treatment with tenofovir disoproxil fumarate (TDF) for chronic hepatitis B (CHB) infection in Asian patients is associated with sustained viral suppression and significant regression of histological fibrosis and cirrhosis. Hepatology Int AASL 2012. Ref ID: TSAI2012B	Not RCT.
Tseng KC, Cheng PN, Wu IC, et al. HBV DNA level as an important determinant of E antigen seroconversion of chronic hepatitis B during Adefovir dipivoxil therapy. Hepatogastroenterology 2009;56:813-8. Ref ID: TSENG2009A	Predictors for e antigen seroconversion (same trial as Marcellin 2003) but only uses small subset of patients (13%).
Vassiliadis T, Nikolaidis N, Giouleme O, et al. Adefovir dipivoxil added to ongoing lamivudine therapy in people with lamivudine-resistant hepatitis B e antigen-negative chronic hepatitis B. Aliment Pharmacol Ther 2005;21:531-7. Ref ID: VASSILIADIS2005	Not RCT.
Villa E, Grottola A, Buttafoco P, et al. High doses of alpha-interferon are required in chronic hepatitis due to coinfection with hepatitis B virus and hepatitis C virus: long term results of a prospective randomized trial. Am J Gastroenterol 2001 Oct;96:2973-7. Ref ID: VILLA2001	Dose-ranging trial of IFN-alpha.
Wang YD, Zhao CY, Wang W et al. Improved efficacy by individualized combination therapy with peg IFN-α 2a and ADV in HBeAg positive chronic hepatitis B patients. Hepato-Gastroenterology 2012; 59: epub ahead of print. Ref ID:WANG2012A	Not randomised.
Westland CE, Yang H, Delaney WE, et al. Week 48 resistance surveillance in two phase 3 clinical studies of adefovir dipivoxil for chronic hepatitis B. Hepatology 2003 Jul;38:96-103. Ref ID: WESTLAND2003A	Did not report treatment outcomes (pooled analysis from 2 trials)
Wolters LM, Hansen BE, Niesters HG, et al. The influence of baseline characteristics on viral dynamic parameters in chronic hepatitis B people treated with lamivudine. J Hepatol 2002 Aug;37:253-8. Ref ID: WOLTERS2002A	Dose-ranging trial of LAM.
Wong DK, Yuen MF, Ngai VW, et al. One-year entecavir or lamivudine therapy results in reduction of hepatitis B virus intrahepatic covalently closed circular DNA levels. Antiviral Therapy 2006;11:909-16. Ref ID: WONG2006	N <10 in each group.
Yalcin K, Degertekin H, Kokoglu OF, et al. A three-month course of lamivudine therapy in HBeAg-positive hepatitis B people with normal aminotransferase levels. Turkish Journal of Gastroenterology 2004 Mar;15:14-20. Ref ID: YALCIN2004	N<50. LAM vs. no therapy.
Zeng M, Mao Y, Yao G, et al. A double-blind randomized trial of adefovir dipivoxil in Chinese subjects with HBeAg-positive chronic hepatitis B. Hepatology 2006 Jul;44:108-16. Ref ID: ZENG2006	Did not have two groups with treatment of interest (duration of ADV).
Zhang CH, Xu GL, Jia WD, et al. Effects of interferon treatment on development and progression of hepatocellular	Meta-analysis of IFN.

Reference	Reason(s) for exclusion
carcinoma in people with chronic virus infection: a meta-analysis of randomized controlled trials. Int J Cancer 2011 Sep 1;129:1254-64. Ref ID: ZHANG2011A	
Zhao H, Kurbanov F, Wan MB, et al. Genotype B and younger patient age associated with better response to low-dose therapy: a trial with pegylated/nonpegylated interferon-alpha-2b for hepatitis B e antigen-positive people with chronic hepatitis B in China. Clin Infect Dis 2007 Feb 15;44:541-8. Ref ID: ZHAO2007	Did not have two groups with treatment of interest (Peg IFn vs. IFNa2b).
Zhao P, Xu D, Wang X, et al. Efficacy compared between entecavir and adefovir dipivoxil on HBeAg-positive nucleos(t)ide-naive people with chronic hepatitis B at week 12 and week 48. Journal of Medical Colleges of PLA 2010;25:298-306. Ref ID: ZHAO2010	Meta-analysis. A more recent meta-analysis (Zhao 2011) has been included in the review.

L.6.2 CHB people co-infected with HCV and/or HDV

Reference	Reason(s) for exclusion
Castelnau C, Le Gal Fdr, Ripault MP, et al. Efficacy of peginterferon alpha-2b in chronic hepatitis delta: Relevance of quantitative RT-PCR for follow-up. Hepatology 2006;44:728-35. Ref ID: CASTELNAU2006	Not a RCT
Farci P, Karayiannis P, Brook MG, et al. Treatment of chronic hepatitis delta virus (HDV) infection with human lymphoblastoid alpha interferon. Q J Med 1989;73:1045-54. Ref ID: FARCI1989	Not a RCT; N=10
Gaudin JL, Faure P, Godinot H, et al. The French experience of treatment of chronic type D hepatitis with a 12-month course of interferon alpha-2B. Results of a randomized controlled trial. Liver 1995 Feb;15:45-52. Ref ID: GAUDIN1995	N<10
Hadziyannis SJ. Use of alpha-interferon in the treatment of chronic delta hepatitis. J Hepatol 1991;13:Suppl-6. Ref ID: HADZIYANNIS1991	Review
Ho SB, Aqel B, Dieperink E, et al. U.S. multicenter pilot study of daily consensus interferon (CIFN) plus ribavirin for "difficult-to-treat" HCV genotype 1 people. Digestive Diseases & Sciences 2011 Mar;56:880-8. Ref ID: HO2011	Not relevant to review question (duration of treatment)
Hung CH, Lee CM, Lu SN, et al. Combination therapy with interferon-alpha and ribavirin in people with dual hepatitis B and hepatitis C virus infection. Journal of Gastroenterology & Hepatology 2005 May;20:727-32. Ref ID: HUNG2005	Not a RCT
Lau DT, Doo E, Park Y, et al. Lamivudine for chronic delta hepatitis. Hepatology 1999 Aug;30:546-9. Ref ID: LAU1999	Lamivudine group, N=5
Liu CJ, Chuang WL, Lee CM, et al. Peginterferon alfa-2a plus ribavirin for the treatment of dual chronic infection with hepatitis B and C viruses. Gastroenterology 2009 Feb;136:496-504. Ref ID: LIU2009B	Not a RCT
Liu CJ, Chen PJ, Lai MY, et al. Ribavirin and interferon is	Not a RCT

Reference	Reason(s) for exclusion
effective for hepatitis C virus clearance in hepatitis B and C dually infected people. Hepatology 2003;37:568-76. Ref ID: LIU2003	
Malaguarnera M, Restuccia S, Pistone G, et al. A meta-analysis of interferon-alpha treatment of hepatitis D virus infection. Pharmacotherapy 1996 Jul;16:609-14. Ref ID: MALAGUARNERA1996	Review
Manns M, Zeuzem S, Sood A, et al. Reduced dose and duration of peginterferon alfa-2b and weight-based ribavirin in people with genotype 2 and 3 chronic hepatitis C. J Hepatol 2011 Sep;55:554-63. Ref ID: MANNS2011A	Not relevant to review question
Potthoff A, Wedemeyer H, Boecher WO, et al. The HEP-NET B/C co-infection trial: A prospective multicenter study to investigate the efficacy of pegylated interferon-alpha2b and ribavirin in people with HBV/HCV co-infection. J Hepatol 2008 Nov;49:688-94. Ref ID: POTTHOFF2008	Not a RCT
Rosina F, Saracco G, Sansalvadore F, et al. Alpha interferon in the treatment of chronic delta hepatitis. Ital J Gastroenterol 1989;21:141-5. Ref ID: ROSINA1989	Not a RCT
Rosina F, Cozzolongo R. Interferon in HDV infection. [Review] [40 refs]. Antiviral Res 1994 Jul;24:165-74. Ref ID: ROSINA1994	Review
Saitta C, Pontisso P, Brunetto MR, et al. Virological profiles in hepatitis B virus/hepatitis C virus coinfected people under interferon plus ribavirin therapy. Antiviral Therapy 2006;11:931-4. Ref ID: SAITTA2006	Not a RCT (follow up study; N=9)
Villa E, Grottola A, Buttafoco P, et al. High doses of alpha-interferon are required in chronic hepatitis due to coinfection with hepatitis B virus and hepatitis C virus: long term results of a prospective randomized trial. Am J Gastroenterol 2001 Oct;96:2973-7. Ref ID: VILLA2001	Dose-ranging trial
Wedemeyer H, Yurdaydin C, Dalekos G, et al. 72 week data of the HIDIT-1 trial: a multicenter randomised study comparing peginterferon alpha-2a plus adefovir vs. peginterferon alpha-2a plus placebo vs adefovir in chronic delta hepatitis. J Hepatol 2007;46:S4. Ref ID: WEDEMEYER2007	Abstract
Wedemeyer H, Yurdaydin C, Zachou K, et al. Serum cytokine levels during PEG-IFNA-2a +/- adefovir treatment of delta hepatitis: results from the hep-net/international HIDIT-1 study. J Hepatol 2008;48:S265. Ref ID: WEDEMEYER2008	Abstract
Yurdaydin C, Bozkaya H, Onder O, et al. Treatment of chronic hepatitis D (CHD) with interferon vs. interferon + lamivudine vs. lamivudine: short-and long-term results. Hepatology 2005;42:724A-5A. Ref ID: YURDAYDIN2005A	Abstract
Yurdaydin C, Wedemeyer H, Dalekos G, et al. A multicenter randomised study comparing the efficacy of pegylated interferon-alfa-2A plus adefovir dipivoxil vs pegylated interferon-apfa-2A plus placebo vs adefovir dipivoxil for the treatment of chronic delta hepatitis: the hep-net/international	Abstract

Reference	Reason(s) for exclusion
delta hepatitis intervention trial (HID-IT). Hepatology 2006;44:230A. Ref ID: YURDAYDIN2006	

L.6.3 Children

Reference	Reason(s) for exclusion
Jonas MM, Kelly DA, Mizerski J et al. A double-blind placebo controlled study of lamivudine in children with chronic hepatitis B (CHB) – overall efficacy and effect of YMDD variant.	Poster abstract only
Kuloglu Z, Kansu A, Erden E, Girgin N. Efficacy of combined interferon alpha and long-term lamivudine therapy in children with chronic hepatitis B. Turkish J Pediatr 2010; 52: 457-463.	not RCT
Sokal EM, Kelly D, Wirth S et al. The pharmacokinetics and safety of adefovir dipivoxil in children and adolescents with chronic hepatitis B virus infection. J Clin Pharmacol 2008; 48: 512-517.	not RCT
Zuccotti GV, Cucchi C, Gracchi V et al. A 1-year trial of lamivudine for chronic hepatitis B in children. J Int Med res 2002; 30: 200-202.	not RCT

L.6.4 Sequential

References	Reasons for exclusion
Ide T, Sata M, Chayama K, et al. Evaluation of long-term entecavir treatment in stable chronic hepatitis B patients switched from lamivudine therapy. Hepatology International 2010;4:594-600. Ref ID: IDE2010	Phase II study
Jang MK, Chung YH, Choi MH, et al. Combination of alpha-interferon with lamivudine reduces viral breakthrough during long-term therapy. Journal of Gastroenterology & Hepatology 2004 Dec;19:1363-8. Ref ID: JANG2004	Not sequential therapy
Tenney DJ, Rose RE, Baldick CJ, et al. Two-year assessment of entecavir resistance in Lamivudine-refractory hepatitis B virus patients reveals different clinical outcomes depending on the resistance substitutions present. Antimicrob Agents Chemother 2007 Mar;51:902-11. Ref ID: TENNEY2007	Not a randomised trial

L.6.5 Prophylactic treatment

Reference	Reason for exclusion
Marzano 2007	Review
Yeo 2004	Not drug of interest
Jang 2005	Abstract (same study as Jang 2006)
Loomba 2008A	Systematic review
Martyak 2007	Systematic review
Katz 2008	Systematic review
Katz 2009	Protocol
Ziakas 2009	Systematic review
Shibolet 2002	Number of controls <10

Reference	Reason for exclusion
Persico 2002	Number of controls <10
Idilman 2001	Number of controls <10
Tsutsumi 2009	Retrospective analysis (not a trial)
Han 2001	Mixed population of prophylactic (n=3) and pre-emptive (n=7)
Filik 2006	Mixed population of prophylactic and pre-emptive
Dai 2004	Number of controls <10

L.6.6 Pregnant women

Excluded studies	Reason for exclusion
Zoulim 2012	Literature review
Yu 2011B	Population not matching with the one specified in the protocol; only 14/40 women in the study group received antiviral treatment during pregnancy, the rest received it during postnatal period
Lawler 2011	Number of participants in the intervention group (tenofovir) less than 10.
Su 2004	Control group does not match with the one specified in the protocol; trial included historical controls with prior use of lamivudine before pregnancy.
Xu 2004	Abstract; we have included the full publication of this trial (Xu 2009)
Ni 2005A	Does not match the protocol; children and not their mothers received treatment
Pan 2012B	Literature review
Shi 2010A	Literature review
Han 2011A	Meta-analysis (12 of the 15 included studies were published in foreign languages)
Ayres 2011	Abstract
Yuejin 2011	Abstract
Yu 2011C	Abstract. Full publication has been included.
Xiaowen 2011	Abstract
Han 2010	Abstract. Full publication has been included.
Han 2012	Abstract. Full publication has been included.
Giles 2011	Literature review

L.7 Monitoring

Fung J et al. Adefovir dipivoxil monotherapy and combination therapy with lamivudine for the treatment of chronic hepatitis B in an Asian population. Antiviral Therapy. 2007. 12:41-46
Liu CJ et al. End of treatment virologic response does not predict relapse after lamivudine treatment for chronic hepatitis B. World Journal of Gastroenterology 2004; 10(24):3574-3578
Lee HW et al. Lamivudine Maintenance Beyond One Year After HBeAg Seroconversion Is a Major Factor for Sustained Virologic Response in HBeAg-Positive Chronic HepatitisB. Hepatology 2010;51:415-421
Su TH et al. Serum hepatitis B surface antigen concentration correlates with HBV DNA level in patients with chronic hepatitis B. Antiviral Therapy 2010; 15:1133-1139
Tong MJ et al. A comparison of hepatitis B viral markers of patients in different clinical stages of chronic infection. Hepatol Int (2010) 4:516-522
Manesis EK et al. Quantitative analysis of hepatitis D virus RNA and hepatitis B surface antigen serum levels in chronic delta hepatitis improves treatment monitoring. Antiviral Therapy 12:381-388

Yuen MF et al. Long-term lamivudine therapy reduces the risk of long-term complications of chronic hepatitis B infection even in patients without advanced disease. Antiviral Therapy 12:1295-1303
Dufour R et al. Diagnosis and Monitoring of Hepatic Injury. II. Recommendations for Use od Laboratory Tests in Screening, Diagnosis and Monitoring. Clinical Chemistry 46:12 2050-2068 (2000)
Sheng YJ et al. lamivudine plus adefovir combination therapy versus entecavir monotherapy for lamivudine resistant chronic hepatitis B: a systematic review and meta-analysis. Virology Journal 2011, 8:393
Kaymakoglu S et al. Long-term results of Interferon Alpha Monotherapy in Patients with HBeAg-Negative Chronic Hepatitis B. Dig Dis Sci (2007) 52:727-731
Dienstag JL et al. Durability of Serologic response After Lamivudine treatment of Chronic Hepatitis B. Hepatology 2003;37:748-755
Van Nunen AB et al. Durability of HBeAg seroconversion following antiviral therapy for chronic hepatitis B: relation to type of therapy and pretreatment serum hepatitis B virus DNA and alanine aminotransferase. Gut 2003;52:420-424
Benhamou Y et al. On treatment virologic suppression at week 24 decreases the risk of hirologic pregression at 1 year; data from the globe trial. Hepatology. 2007. 46;4(suppl1): 681A
Lok ASF et al. Acute exacerbations in Chinese patients with chronic hepatitis B virus (HBV) infection. Journal of Hepatology, 1990; 10:29-34
Liaw YF et al. Acute exacerbation in Chronic Type B Hepatitis: comparison between HBeAg and Antibody-Positive patients. Hepatology Vol. 7, No1, pp 20-23, 1987
Lok ASF et al. Spontaneous Hepatitis B e Antigen to antibody Seroconversion and reversion in Chinese patients with Chronic Hepatitis B virus Infection. Gastroenterology 1987; 92:1839-43
Montazeri G et al. Liver histology and HBV DNA levels in chronically HBV infected patients with persistently normal alanine aminotransferase. Archives of Iranian Medicine, Vol 13, No 3, May 2010 Van der Eijk AA et al. Quantitative HBV DNA levels as an early predictor of nonresponse in chronic HBe-antigen positive hepatitis B patients treated with interferon alpha. Journal of Viral Hepatitis, 2006, 13, 96-103
Heijtink RA et al. Interferon a therapy in chronic hepatitis B: early monitoring of hepatitis e antigen may help to decide whether to stop or to prolong therapy. Journal of Viral Hepatitis, 2000, 7, 382-386
Chu CJ et al. Quantitative Serum HBV DNA Levels during different stages of Chronic Hepatitis B infection. Hepatology. 2002; 36:1408-1415
Yoon et al. Long-term results of lamivudine monotherapy in Korean patients with HBeAg-positive chronic hepatitis B: response and relapse rates, and factors related to durability of HBeAg seroconversion. Intervirology. 2005; 48:341-349 Imtiaz F et al. T. Monitoring of HBe antigen and alanine aminotransferase levels in hepatitis b virus DNA positive patients. JCPSP 2005, Vol 15 (2): 103-104 Lee JM et al. Long-term adefovir dipivoxil monotherapy for up to 5 years in lamivudine-resistant chronic hepatitis B. Antiviral Therapy 2010; 15:235-241. Wong GLH et al. On-treatment monitoring of liver fibrosis with transient elastography in chronic

hepatitis B patients. Antiviral Therapy 2011; 16:165-172
Song BC et al. Hepatitis B e antigen seroconversion after Lamivudine therapy is not durable in patients with chronic hepatitis B in Korea. Hepatology 2000;32:803-806
Fujisawa F et al. Long-term outcome of Chronic Hepatitis B in Adolescents or Young Adults in Follow-up from childhood. Journal Paediatric Gastroenterology and Nutrition Feb 2000;30:201-206
Lee CM et al. Durability of lamivudine-induced HBeAg seroconversion for chronic hepatitis B patients with acute exacerbation. Journal of Hepatology 37 (2002) 669-674
Juday T et al. Adherence to Chronic Hepatitis B Treatment Guideline recommendations for laboratory monitoring of patients who are not receiving antiviral treatment. J Gen Intern Med 26(3):239-44
Bortolotti F et al. Chronic hepatitis B in children after e antigen seroclearance: final report of a 29-year longitudinal study. Hepatology 2006;43:556-562
Mels GC et al. Fluctuations in viremia, aminotransferases and IgM antibody to hepatitis B core antigen in chronic hepatitis B patients with disease exacerbations. Liver 1994: 14: 175-181
Li J et al. Predictors of response in patients with HBeAg-positive chronic hepatitis B using adefovir dipivoxil therapy. Viral hepatitis B- Clinical (Therapy, New coumpounds, Resistance). Posters presentation 2007
Bekku D et al. Long term follow up of patients with hepatitis B e antigen negative chronic hepatitis B. Journal of Gastroenterology and Hepatology 26 (2011) 122-128.
Tenney DJ et al. Long term monitoring shows Hepatitis B virus resistance to entecavir in nucleoside-naïve patients is rare through 5 years of therapy. Hepatology 2009;49:1503-1514
Jaroszewicz J et al. Hepatitis B surface antigen (HBsAg) levels in the natural history of hepatitis B virus (HBV)-infection: a European perspective. Journal of Hepatology 2010 vol. 52: 514-52
Chu CM et al. Natural history of Hepatitis B e Antigen to Antibody Seroconversion in Patients with Normal Serum Aminotransferase Levels. American Journal of Medicine 2004;116:829-834
Liaw YF et al. Clinical Utility of Hepatitis B Surface Antigen Quantitation in Patients With Chronic Hepatitis B: A Review. Hepatology 2011;53:2121-2129
Kim HS et al. Predictive Factors for Early HBeAg Seroconversion in Acute Exacerbation of patients with HBeAg-positive chronic Hepatitis B. Gastroenterology 2009;136:505-512
Brunetto MR et al. Outcome of anti-HBe positive chronic hepatitis B in alpha-interferon treated and untreated patients: a long term cohort study. Journal of Hepatology 36 (2002) 263-270
Zacharakis G et al. The role of serial measurement of serum HBV DNA levels in patients with chronic HBeAg (-) hepatitis B infection: Association with liver disease progression. A prospective cohort study. Journal of Hepatology 49 (2008) 884-891
Marcellin P et al. Increasing serologic, virologic and biochemical response over time to adefovir dipivoxil (ADV) 10mg in HBeAg+ Chronic Hepatitis B (CHB) patients. Parallel Session 8: Hepatitis B- Immunology and Therapy
Da Silva LC et al. efficacy of long-term therapy using high lamivudine doses for the treatment of chronic hepatitis B. Journal of Gastroenterology 2001; 36:476-485
Tsang PSY et al. Significant Prevalence of Histologic Disease in Patients with Chronic Hepatitis B and Mildly Elevated Serum Alanine Aminotransferase Levels. Clinical Gastroenterology and Hepatolgy 2008;6:569-574
Boxall EH et al. Long-term follow up of Hepatitis C Carrier Children treated with Interferon and Prednisolone. Journal of Medical Virology 78:888-895 (2006)
Park W et al. Diagnosis and treatment of chronic Hepatitis B. MinervaGastroenterol Dietol 2004;50:289-303
Huo T et al. Factors predictive of liver cirrhosis in patients with chronic hepatitis B: a multivariate analysis in a longitudinal study. European Journal of Gastroenterology and Hepatology 2000, 12:686-693
Lee JH et al. Correlation between quantitative serum HBsAg and HBV DNA test in Korean patients who showed high level of HBsAg. J Clin Pathol 2010;63:1027-1031
Kung K et al. Screening chronic hepatitis B carriers – a retrospective study in a primary care clinic. HK Practice 2004; 26: 2.
Tai DI et al. Relative roles of HBsAg Seroclearance and Mortality in the Decline of HBsAg prevalence with increasing age. Am J Gastroenterology 2010; 105:1102-1109
Santantonio T et al. Long-term follow up of patients with anti-HBe/HBV DNA positive chronic

hepatitis B treated for 12 months with lamivudine. Journal of Hepatology 2000; 32:300-306 Chan HLY et al. Serum Hepatitis B Surface Antigen Quantitation can reflect Hepatitis B virus in the liver and predict treatment response. Clinical Gastroenterology and Hepatology 2007;5:1462-1468

L.8 Surveillance

Reference	Reason for exclusion
Yang 2012	Review
Kim 2011	Review
Niravath 2011	Surveillance vs. no surveillance
Tan 2011	Not comparing different time intervals
Amarapurka 2009A	Surveillance vs. no surveillance
Han 2009	Not related to review question
Wong 2008	Surveillance vs. no surveillance
Thompson 2007A	Not related to review question
Ren 2006	Single time interval; no comparison group
Tong 2006	Single time interval; no comparison group
Mok 2006	Not related to review question
Wun 2003	Systematic review – surveillance vs. no surveillance
Trevisani 2004	Surveillance vs. no surveillance

L.9 In vitro

Reference	Reason for exclusion
Fung 2009C	Mixed antiviral resistance; based on a small sample size (abstract)
Lada 2011B	Not related to review question (adefovir resistance)
Fung 2009D	LAM resistance plus other mutations. Same abstract as Fung 2009B.
Amini-Bavil-Olyaee 2009	LAM resistance plus other mutations
van Bommel 2010	Not related to review question - mixed LAM and ADV resistance; not comparing mutant strains with wild type
van Bommel 2006	Not related to review question - mixed LAM and ADV resistance; not comparing mutant strains with wild type
van Bommel 2004	Not related to review question - mixed LAM and ADV resistance; not comparing mutant strains with wild type
Hann 2008	Not in vivo/in vitro study
Tsuge 2010	Mixed LAM and ADV resistance – did not examine drug of interest (TDF)
Levero 2010A	Not related to review question - mixed resistance mutations
Fung 2009B	LAM resistance plus other mutations
Manns 2011	Not related to review question
Patterson 2009	Mixed LAM and ADV resistance
Patterson 2011	Mixed LAM and ADV resistance
Zhu 2011A	Not related to review question

Appendix M: Excluded economic studies

M.1 Antiviral therapies

M.1.1 Monotherapies

First author	Title	Journal	Publication year	Notes
Arnold	Cost-effectiveness analysis of entecavir versus lamivudine in the first-line treatment of Australian patients with chronic hepatitis B.	Applied Health Economics and Health Policy.	2008	Partially applicable, potentially serious limitations Does not include all relevant comparators for the question Health system and costing perspective may be insufficiently similar to the UK NHS Unclear whether baseline estimates of health outcomes are applicable to UK population Potential conflict of interest
Buti	Cost-effectiveness analysis of lamivudine and adefovir dipivoxil in the treatment of patients with HBeAg-negative chronic hepatitis B.	Aliment Pharmacol Ther.	2006	Partially applicable, potentially serious limitations Does not include all relevant comparators for the question Health system and costing perspective may not be sufficiently similar to the UK NHS Health effects not measured as QALYs Insufficient length of follow up to capture all benefits and harms Potential conflict of interest
Costa	Cost-effectiveness of entecavir versus lamivudine for the suppression of viral replication in chronic hepatitis B patients in Brazil.	Brazilian Journal of Infectious Diseases.	2008	Partially applicable, potentially serious limitations Does not include all relevant comparators for the question Health system and costing perspective insufficiently similar to the UK NHS Insufficient length of follow up to capture all benefits and harms Potential conflict of interest
Kanwal	Treatment alternatives for chronic hepatitis B viral infection: a cost-effectiveness analysis.	Ann Intern Med.	2005	Partially applicable, potentially serious limitations Does not include all relevant comparators for the question Health system and costing

First author	Title	Journal	Publication year	Notes
				perspective may not be sufficiently similar to the UK NHS
Lacey	Economic evaluation of chronic hepatitis B treatments in Taiwan.	J Gastroenterol Hepatol.	2008	Partially applicable; potentially serious limitations Does not include all relevant comparators for the question Health system and costing perspective insufficiently similar to the UK NHS Unclear whether baseline estimates of health outcomes are applicable to UK population
Lacey	The cost-effectiveness of long-term antiviral therapy in the management of HBeAg-positive and HBeAg-negative chronic hepatitis B in Singapore.	J Viral Hepat.	2007	Partially applicable, potentially serious limitations Does not include all relevant comparators for the question Health system and costing perspective insufficiently similar to the UK NHS Discounting rate of 5% per annum Unclear whether baseline estimates of health outcomes are applicable to UK population
Lui	Cost-effectiveness analysis of roadmap models in chronic hepatitis B using tenofovir as the rescue therapy.	Antiviral Therapy.	2010	Partially applicable, potentially serious limitations Does not include all relevant comparators for the question Health system and costing perspective insufficiently similar to the UK NHS Insufficient length of follow up to capture all benefits and harms Not all relevant costs are included No discounting used Potential conflict of interest
Orlewska	The cost-effectiveness analysis of entecavir in the treatment of chronic hepatitis B (CHB) patients in Poland.	Experimental and Clinical Hepatology.	2008	Partially applicable, potentially serious limitations Does not include all relevant comparators for the question Health system and costing perspective insufficiently similar to the UK NHS Insufficient length of follow up to capture all benefits and harms Potential conflict of interest
Sullivan	Cost-effectiveness of peginterferon alpha-2a compared to lamivudine	J Gastroenter	2007	Partially applicable, potentially serious limitations

First author	Title	Journal	Publication year	Notes
	treatment in patients with hepatitis B e antigen positive chronic hepatitis B in Taiwan.	ol Hepatol.		Does not include all relevant comparators for the question Health system and costing perspective insufficiently similar to the UK NHS Insufficient length of follow up to capture all benefits and harms Unclear whether baseline estimates of health outcomes are applicable to UK population Potential conflict of interest
Veenstra	Cost-effectiveness of peginterferon alpha-2a compared with lamivudine treatment in patients with HBe-antigen-positive chronic hepatitis B in the United Kingdom	Eur J Gastroenterol Hepatol.	2007	Partially applicable, potentially serious limitations Does not include all relevant comparators for the question Estimates of relative treatment effects may be outdated Potential conflict of interest
Veenstra	Cost effectiveness of entecavir versus lamivudine with adefovir salvage in HBeAg-positive chronic hepatitis B.	Pharmacoeconomics.	2007	Partially applicable, potentially serious limitations Does not include all relevant comparators for the question Health system and costing perspective may not be sufficiently similar to the UK NHS Not all relevant estimates of resource use included Potential conflict of interest
Veenstra	HBeAg-negative chronic hepatitis B: cost-effectiveness of peginterferon alfa-2a compared to lamivudine in Taiwan	Value in Health	2008	Partially applicable, potentially serious limitations Does not include all relevant comparators for the question Health system and costing perspective insufficiently similar to the UK NHS Unclear whether baseline estimates of health outcomes are applicable to UK population Potential conflict of interest
Wu	Cost-effectiveness of nucleoside analog therapy for hepatitis B in China: a Markov analysis.	Value in Health.	2010	Partially applicable, potentially serious limitations Does not include all relevant comparators for the question Health system and costing perspective insufficiently similar to the UK NHS Insufficient length of follow up to capture all benefits and harms

First author	Title	Journal	Publication year	Notes
				Unclear whether baseline estimates of health outcomes are applicable to UK population Potential conflict of interest
Yuan	Evaluation of the cost-effectiveness of entecavir versus lamivudine in hepatitis BeAg-positive chronic hepatitis B patients.	Journal of Managed Care Pharmacy.	2008	Partially applicable, potentially serious limitations Does not include all relevant comparators for the question Health system and costing perspective insufficiently similar to the UK NHS Model structure does not adequately reflect condition Insufficient length of follow up to capture all benefits and harms Unclear whether baseline estimates of health outcomes are applicable to UK population Potential conflict of interest
Yuan	Economic implications of entecavir treatment in suppressing viral replication in chronic hepatitis B (CHB) patients in China from a perspective of the Chinese Social Security program.	Value in Health.	2008	Partially applicable, potentially serious limitations Does not include all relevant comparators for the question Health system and costing perspective insufficiently similar to the UK NHS Unclear whether baseline estimates of health outcomes are applicable to UK population

M.1.2 Pregnant women

Reference	Title	Reason for exclusion
Ali 2012	Administration of Lamivudine in the third trimester to reduce the risk of perinatal transmission of hepatitis B: a cost effectiveness analysis	Abstract only; US study; not enough information
Unal2011A	Cost effectiveness of Maternal treatment to prevent perinatal Hepatitis B virus transmission	US study; No QALYs; Treatment vs no treatment instead of comparative between treatments; Selectively excluded based on better study available

M.2 Surveillance

Reference	Title	Reason for exclusion
Amarapurka2009A	Surveillance program for Hepatocellular carcinoma	Abstract only; review, no original cost effectiveness
Zurawska2012	Hepatitis B Virus screening Before Chemotherapy for Lymphoma: A Cost-Effectiveness Analysis	Doesn't answer the question, screening for HepB in Cancer rather than the other way around

Reference	Title	Reason for exclusion
Chang 2011B	Cost Effectiveness of screening for hepatocellular carcinoma among subjects at different levels of risk	Screening versus no screening rather than frequency. Also does not use QALYs, in Taiwan population

Appendix N: Quality Assessment Checklists

N.1 Diagnostics

Study reference: Cardoso 2012 (TE)				
Domain 1: patient selection		Yes/No/ Unclear	Rating (Low, high, unclear)	Additional comments
Risk of bias	Was a consecutive or random sample of patients enrolled? Did the study include “difficult” to diagnose patients?	Yes (consecutive)No	Unclear	Patients who were admitted for a biopsy and TE were included (i.e. exclusions unclear). Patients excluded if insufficient sample for biopsy (number unclear).
Lack of applicability	Are there concerns that the included patient and setting do not match the question?	No	Low	
Domain 2: index test				
Risk of bias	Were the index test results interpreted without knowledge of the results of the reference standard? Did the study pre-specify the threshold for a positive result?	Yes Yes	Low	TE carried out before biopsy
Lack of applicability	Are there concerns that the test technology, test methods and interpretation do not match the question?	No	Low	
Domain 3: reference standard				
Risk of bias	Is the reference standard likely to correctly classify the target condition? Were the reference standard results interpreted without knowledge of the results?	Yes Yes	Low	Liver biopsy specimens were analysed by the same pathologist unaware of the clinical data.
Lack of applicability	Are there concerns that the target condition as defined by the reference standard does not match the question?	No	Low	
Domain 4: Flow and timing				
Risk of bias	Was there an appropriate interval between index test and reference standard? Did all patients receive a reference standard?	Yes	Low	Measured on same day

Study reference: Cardoso 2012 (TE)				
		Yes		
Overall risk of bias Overall indirectness/lack of applicability	Unclear Low			Unclear number of patients excluded

Study reference: Castera 2011 (Fibrotest, APRI, TE)				
Domain 1: patient selection		Yes/No/ Unclear	Rating (Low, high, unclear)	Additional comments
Risk of bias	Was a consecutive or random sample of patients enrolled? Did the study include “difficult” to diagnose patients?	Yes (consecutive)No	High	43/412 (10%) patients were excluded from the study because of unsuccessful TE measurements Liver biopsy was performed according to clinical needs. Only 60/329 (18%) patients had a biopsy
Lack of applicability	Are there concerns that the included patient and setting do not match the question?	Unclear	Unclear	(HBeAg negative, largely inactive carriers)
Domain 2: index test				
Risk of bias	Were the index test results interpreted without knowledge of the results of the reference standard? Did the study pre-specify the threshold for a positive result?	Unclear Yes	Unclear	
Lack of applicability	Are there concerns that the test technology, test methods and interpretation do not match the question?	No	Low	
Domain 3: reference standard				
Risk of bias	Is the reference standard likely to correctly classify the target condition? Were the reference standard results interpreted	Yes Yes	Low	Liver biopsy specimens were analysed by the same pathologist blinded to the results of non-invasive tests.

Study reference: Castera 2011 (Fibrotest, APRI, TE)				
	without knowledge of the results?			
Lack of applicability	Are there concerns that the target condition as defined by the reference standard does not match the question?	No	Low	
Domain 4: Flow and timing				
Risk of bias	Was there an appropriate interval between index test and reference standard? Did all patients receive a reference standard?	Unclear No	High	Only 60 patients had a liver biopsy; index tests were conducted in 329 patients
Optional domain: comparative accuracy studies				
Risk of bias	Did all patients undergo all index tests or were the index tests appropriately randomised amongst the patients? Were index tests conducted within a short time interval? Are index test results unaffected when undertaken together on the same patient?	Yes Yes Yes	Low	Fibrotest and APRI Blood parameters taken at the time of TE.
Lack of applicability	Are there concerns that this study (both patients and test methods) does not match the question?	No	Low	
Overall risk of bias Overall indirectness/lack of applicability	High Unclear			Selection bias for who had a biopsy; unclear blinding Group of patients may not be representative (largely inactive carriers)

Study reference: Chan 2009 (TE)				
Domain 1: patient selection		Yes/No/ Unclear	Rating (Low, high,	Additional comments

Study reference: Chan 2009 (TE)				
			unclear)	
Risk of bias	Was a consecutive or random sample of patients enrolled? Did the study include “difficult” to diagnose patients?	Yes (consecutive) No	Unclear	13% excluded overall mostly for inadequate liver biopsy samples
Lack of applicability	Are there concerns that the included patient and setting do not match the question?	No	Low	
Domain 2: index test				
Risk of bias	Were the index test results interpreted without knowledge of the results of the reference standard? Did the study pre-specify the threshold for a positive result?	Unclear No	High	Optimal cut off for TE was chosen to obtain either at least 90% sen, at least 90% specificity; a max. sum of sen and spec and a max. of diagnostic accuracy.
Lack of applicability	Are there concerns that the test technology, test methods and interpretation do not match the question?	No	Low	
Domain 3: reference standard				
Risk of bias	Is the reference standard likely to correctly classify the target condition? Were the reference standard results interpreted without knowledge of the results?	Yes Yes	Low	Liver biopsy specimen at least 1.5cm and 6 portal tracts. Assessed by two pathologists blinded to clinical data. Inter-observer agreement was satisfactory.
Lack of applicability	Are there concerns that the target condition as defined by the reference standard does not match the question?	No	Low	
Domain 4: Flow and timing				
Risk of bias	Was there an appropriate interval between index test and reference standard? Did all patients receive a reference standard?	Yes Yes	Low	TE performed within 4 weeks from liver biopsy. 22/186 excluded from the analysis due to inadequate liver biopsy sample size; 1 unsuccessful LSM and 2 excluded for both reasons.

Study reference: Chan 2009 (TE)				
Overall risk of bias Overall indirectness / lack of applicability	High Low			Choice of thresholds, exclusions

Study reference: Chen 2012 (TE)				
Domain 1: patient selection		Yes/No/ Unclear	Rating (Low, high, unclear)	Additional comments
Risk of bias	Was a consecutive or random sample of patients enrolled? Did the study include “difficult” to diagnose patients?	Yes (random) No	Unclear	61/389 (16%) excluded for inadequate biopsy sample and 5 had unreliable TE
Lack of applicability	Are there concerns that the included patient and setting do not match the question?	no	Low	
Domain 2: index test				
Risk of bias	Were the index test results interpreted without knowledge of the results of the reference standard? Did the study pre-specify the threshold for a positive result?	Unclear No	High	Optimal cut off values for TE were chosen to obtain LR+ >10 for confirming diagnosis and LR-<-0.1 for excluding diagnosis.
Lack of applicability	Are there concerns that the test technology, test methods and interpretation do not match the question?	No	Low	
Domain 3: reference standard				
Risk of bias	Is the reference standard likely to correctly classify the target condition? Were the reference standard results interpreted without knowledge of the results?	Yes Yes	Low	Biopsies were read by a single liver pathologist without knowledge of liver stiffness results.
Lack of applicability	Are there concerns that the target condition as defined by the reference standard does not match	No	Low	

Study reference: Chen 2012 (TE)				
	the question?			
Domain 4: Flow and timing				
Risk of bias	Was there an appropriate interval between index test and reference standard? Did all patients receive a reference standard?	Yes Yes	Low	TE performed within one week of liver biopsy; lab tests were performed within 3 days of TE. 19% excluded from the analysis because of inadequate LB sample size and unreliable TE and decompensated CHB patients.
Lack of applicability	Are there concerns that this study (both patients and test methods) does not match the question?	No	Low	
Overall risk of bias Overall indirectness/ lack of applicability	High Low			Choice of threshold, 16% excluded

Study reference: Gaia 2011 (TE)				
Domain 1: patient selection		Yes/No/ Unclear	Rating (Low, high, unclear)	Additional comments
Risk of bias	Was a consecutive or random sample of patients enrolled? Did the study include “difficult” to diagnose patients?	Yes No	Low	Patients were excluded if they had unsuccessful TE measurements (8% across all liver disease) or if the biopsy specimens were inadequate or diagnosis was uncertain (about 4%)
Lack of applicability	Are there concerns that the included patient and setting do not match the question?	No	Low	
Domain 2: index test				
Risk of bias	Were the index test results interpreted without knowledge of the results of the reference standard? Did the study pre-specify the threshold for a positive result?	Yes No	Unclear	Performed by trained operators, blind to liver histology but had access to medical records of the patients. Optimal cut off were chosen to maximise sensitivity, specificity and

Study reference: Gaia 2011 (TE)				
				diagnostic accuracy. Not necessarily bias
Lack of applicability	Are there concerns that the test technology, test methods and interpretation do not match the question?	No	Low	
Domain 3: reference standard				
Risk of bias	Is the reference standard likely to correctly classify the target condition? Were the reference standard results interpreted without knowledge of the results?	Yes Yes	Low	All specimens were analysed by pathologist blinded to results of LSM but not to the clinical/biochemical data.
Lack of applicability	Are there concerns that the target condition as defined by the reference standard does not match the question?	No	Low	
Domain 4: Flow and timing				
Risk of bias	Was there an appropriate interval between index test and reference standard? Did all patients receive a reference standard?	No Yes	High	TE performed within 6 months of liver biopsy
Overall risk of bias Overall indirectness/ lack of applicability	High Low			Time between tests, lack of clarity about threshold

Study reference: Kim 2010A (APRI)				
Domain 1: patient selection		Yes/No/ Unclear	Rating (Low, high, unclear)	Additional comments
Risk of bias	Was a consecutive or random sample of patients enrolled? Did the study include “difficult” to diagnose patients?	Yes (consecutive) No	Low	Only 1/565 patients excluded for unsuitable sample for biopsy
Lack of applicability	Are there concerns that the included patient and setting do not match the question?	No	Low	

Study reference: Kim 2010A (APRI)				
Domain 2: index test				
Risk of bias	Were the index test results interpreted without knowledge of the results of the reference standard? Did the study pre-specify the threshold for a positive result?	Unclear N/A	Low	2x2 data not reported, only AUC
Lack of applicability	Are there concerns that the test technology, test methods and interpretation do not match the question?	No	Low	
Domain 3: reference standard				
Risk of bias	Is the reference standard likely to correctly classify the target condition? Were the reference standard results interpreted without knowledge of the results?	Yes Yes	Low	
Lack of applicability	Are there concerns that the target condition as defined by the reference standard does not match the question?	No	Low	
Domain 4: Flow and timing				
Risk of bias	Was there an appropriate interval between index test and reference standard? Did all patients receive a reference standard?	Yes Yes	Low	Within the same day of liver biopsy.
Overall risk of bias Overall indirectness /lack of applicability	Low Low			Good study

Study reference: Kim 2010B (TE)				
Domain 1: patient selection		Yes/No/ Unclear	Rating (Low, high, unclear)	Additional comments
Risk of bias	Was a consecutive or random sample of patients enrolled? Did the study include “difficult” to diagnose	Yes (consecutive)	Unclear	Patients included if they had undergone both liver biopsy and TE on the same day. Unclear how many

Study reference: Kim 2010B (TE)				
	patients?	No		excluded. 8/391 excluded because of unreliable TE (5) or biopsy unsuitable for staging (3)
Lack of applicability	Are there concerns that the included patient and setting do not match the question?	No	Low	
Domain 2: index test				
Risk of bias	Were the index test results interpreted without knowledge of the results of the reference standard? Did the study pre-specify the threshold for a positive result?	Unclear N/A	Unclear	2x2 results not reported
Lack of applicability	Are there concerns that the test technology, test methods and interpretation do not match the question?	No	Low	
Domain 3: reference standard				
Risk of bias	Is the reference standard likely to correctly classify the target condition? Were the reference standard results interpreted without knowledge of the results?	Yes Yes	Low	Single pathologist blinded to TE results. Specimen at least 1.5cm long.
Lack of applicability	Are there concerns that the target condition as defined by the reference standard does not match the question?	No	Low	
Domain 4: Flow and timing				
Risk of bias	Was there an appropriate interval between index test and reference standard? Did all patients receive a reference standard?	Yes Yes	Low	Within 2 days between LSM and liver biopsy.
Overall risk of bias Overall indirectness/lack of applicability	Unclear Low			Patients excluded if didn't have TE and liver biopsy on the same day

Study reference: Kim 2009 (TE, APRI)				
Domain 1: patient selection		Yes/No/	Rating	Additional comments

Study reference: Kim 2009 (TE, APRI)				
		Unclear	(Low, high, unclear)	
Risk of bias	Was a consecutive or random sample of patients enrolled? Did the study include “difficult” to diagnose patients?	Yes (consecutive) No	Unclear	Patients included if they had undergone both liver biopsy and TE. Unclear how many excluded.
Lack of applicability	Are there concerns that the included patient and setting do not match the question?	No	Low	
Domain 2: index test				
Risk of bias	Were the index test results interpreted without knowledge of the results of the reference standard? Did the study pre-specify the threshold for a positive result?	Unclear No	High	Optimal threshold chosen to maximise sensitivity and specificity
Lack of applicability	Are there concerns that the test technology, test methods and interpretation do not match the question?	No	Low	
Domain 3: reference standard				
Risk of bias	Is the reference standard likely to correctly classify the target condition? Were the reference standard results interpreted without knowledge of the results?	Yes Yes	Low	Blinded to patients’ clinical history.
Lack of applicability	Are there concerns that the target condition as defined by the reference standard does not match the question?	No	Low	
Domain 4: Flow and timing				
Risk of bias	Was there an appropriate interval between index test and reference standard? Did all patients receive a reference standard?	Yes Yes	Low	TE measured on the same day of liver biopsy.
Optional domain: comparative accuracy				

Study reference: Kim 2009 (TE, APRI)				
studies				
Risk of bias	Did all patients undergo all index tests or were the index tests appropriately randomised amongst the patients? Were index tests conducted within a short time interval? Are index test results unaffected when undertaken together on the same patient?	Yes Yes Yes	Low	
Lack of applicability	Are there concerns that this study (both patients and test methods) does not match the question?	No	Low	
Overall risk of bias Overall indirectness / lack of applicability	Unclear (TE, TE+APRI) Low			Patients excluded if didn't have TE and liver biopsy

Study reference: Kim 2012B (Fibrotest, TE)				
Domain 1: patient selection		Yes/No/ Unclear	Rating (Low, high, unclear)	Additional comments
Risk of bias	Was a consecutive or random sample of patients enrolled? Did the study include "difficult" to diagnose patients?	Yes (consecutive) No	Unclear	Liver biopsy was performed to assess the severity of fibrosis and inflammation prior to treatment Some patients (number not stated) excluded because of inadequate liver biopsy size or unsuccessful TE
Lack of applicability	Are there concerns that the included patient and setting do not match the question?	No	Low	
Domain 2: index test				
Risk of bias	Were the index test results interpreted without knowledge of the results of the reference standard? Did the study pre-specify the threshold for a positive result?	Yes	Low	Reference standard carried out immediately after TE. Unclear about Fibrotest.
Lack of applicability	Are there concerns that the test technology, test	No	Low	

Study reference: Kim 2012B (Fibrotest, TE)				
	methods and interpretation do not match the question?			
Domain 3: reference standard				
Risk of bias	Is the reference standard likely to correctly classify the target condition? Were the reference standard results interpreted without knowledge of the results?	Yes Yes	Low	Pathologist blinded to the patients' clinical history Specimen at least 2.0cm long.
Lack of applicability	Are there concerns that the target condition as defined by the reference standard does not match the question?	No	Low	
Domain 4: Flow and timing				
Risk of bias	Was there an appropriate interval between index test and reference standard? Did all patients receive a reference standard?	Yes Yes	Low	Liver biopsy "immediately after" TE and FT
Optional domain: comparative accuracy studies				
Risk of bias	Did all patients undergo all index tests or were the index tests appropriately randomised amongst the patients? Were index tests conducted within a short time interval? Are index test results unaffected when undertaken together on the same patient?	Yes Yes Yes	Low	TE operator was blinded to the patients' clinical and laboratory data
Lack of applicability	Are there concerns that this study (both patients and test methods) does not match the question?	No	Low	
Overall risk of bias Overall indirectness/ lack of applicability	Unclear Low			Unclear how many patients who were difficult to diagnose were excluded.

Study reference: Lesmana 2011 (TE, APRI)

Study reference: Lesmana 2011 (TE, APRI)				
Domain 1: patient selection		Yes/No/ Unclear	Rating (Low, high, unclear)	Additional comments
Risk of bias	Was a consecutive or random sample of patients enrolled? Did the study include “difficult” to diagnose patients?	Yes (consecutive) Yes	Low	Apparently no missing patients from the analysis.
Lack of applicability	Are there concerns that the included patient and setting do not match the question?	Unclear	Unclear	Unclear whether exclusion of patients with signs of cirrhosis constituted lack of applicability
Domain 2: index test				
Risk of bias	Were the index test results interpreted without knowledge of the results of the reference standard? Did the study pre-specify the threshold for a positive result?	Unclear No	Unclear	Cut off values based on maximising the sum of sensitivity and specificity. Not necessarily risk of bias (% cirrhotic patients was small as patients with cirrhosis who already had clinical signs of cirrhosis was not included. The low number of patients in F4 category may skew data distribution and may contribute to the low cut off points of TE).
Lack of applicability	Are there concerns that the test technology, test methods and interpretation do not match the question?	No	Low	
Domain 3: reference standard				
Risk of bias	Is the reference standard likely to correctly classify the target condition? Were the reference standard results interpreted without knowledge of the results?	Yes Unclear	Unclear	Performed by senior pathologist, blinded to patients’ clinical history. Did not specify if he/she was aware of results of the index tests. Adequate specimen at least 1.5cm and 5 portal systems.
Lack of applicability	Are there concerns that the target condition as defined by the reference standard does not match	No	Low	

Study reference: Lesmana 2011 (TE, APRI)				
	the question?			
Domain 4: Flow and timing				
Risk of bias	Was there an appropriate interval between index test and reference standard? Did all patients receive a reference standard?	Yes Yes	Low	TE measurements were performed on the same day with liver biopsy.
Optional domain: comparative accuracy studies				
Risk of bias	Did all patients undergo all index tests or were the index tests appropriately randomised amongst the patients? Were index tests conducted within a short time interval? Are index test results unaffected when undertaken together on the same patient?	Yes Unclear Yes	Unclear	Unclear when blood markers were taken.
Lack of applicability	Are there concerns that this study (both patients and test methods) does not match the question?	No	Low	
Overall risk of bias Overall indirectness / lack of applicability	Unclear Unclear			Unclear whether blinded Unclear whether exclusion of patients with signs of cirrhosis constituted lack of applicability

Study reference: Liu 2011 (APRI)				
Domain 1: patient selection		Yes/No/ Unclear	Rating (Low, high, unclear)	Additional comments
Risk of bias	Was a consecutive or random sample of patients enrolled? Did the study include “difficult” to diagnose patients?	No No	High	Patients with liver biopsy and records in the histology lab database were included. They were excluded if insufficient liver tissue or absence of serum markers

Study reference: Liu 2011 (APRI)				
Lack of applicability	Are there concerns that the included patient and setting do not match the question?	Unclear	Unclear	Histology lab database
Domain 2: index test				
Risk of bias	Were the index test results interpreted without knowledge of the results of the reference standard? Did the study pre-specify the threshold for a positive result?	Unclear Unclear	Unclear	Optimal cut off used
Lack of applicability	Are there concerns that the test technology, test methods and interpretation do not match the question?	No	Low	
Domain 3: reference standard				
Risk of bias	Is the reference standard likely to correctly classify the target condition? Were the reference standard results interpreted without knowledge of the results?	Yes Yes	Low	Single pathologist blinded to clinical information
Lack of applicability	Are there concerns that the target condition as defined by the reference standard does not match the question?	No	Low	
Domain 4: Flow and timing				
Risk of bias	Was there an appropriate interval between index test and reference standard? Did all patients receive a reference standard?	Yes Yes	Low	Within one week of liver biopsy
Overall risk of bias Overal indirectness /lack of applicability	Very high Unclear applicability			Selection bias – people from histology database, retrospective, some exclusions

Study reference: Marcellin 2009A (TE)				
Domain 1: patient selection		Yes/No/ Unclear	Rating (Low, high,	Additional comments

Study reference: Marcellin 2009A (TE)				
			unclear)	
Risk of bias	Was a consecutive or random sample of patients enrolled? Did the study include "difficult" to diagnose patients?	Yes (consecutive) No	Unclear	Only results of TE obtained with ≥7 successful acquisitions and success rate of ≥50% were considered reliable. 14 had non-reliable TE and 15 had non-interpretable liver biopsy; 173/202 (85%) were analysed
Lack of applicability	Are there concerns that the included patient and setting do not match the question?	No	Low	8 of the 173 patients had alcohol intake >40g/d, 2 had HDV coinfection and 11 had HIV coinfection.
Domain 2: index test				
Risk of bias	Were the index test results interpreted without knowledge of the results of the reference standard? Did the study pre-specify the threshold for a positive result?	Unclear No	Unclear	Optimal cut off values were based on maximising the sum of sensitivity and specificity, or maximising the diagnostic accuracy. Not necessarily risk of bias
Lack of applicability	Are there concerns that the test technology, test methods and interpretation do not match the question?	No	Low	Index test was carried out adequately. LSM with success rate of ≥50% was considered reliable.
Domain 3: reference standard				
Risk of bias	Is the reference standard likely to correctly classify the target condition? Were the reference standard results interpreted without knowledge of the results?	Yes Yes	Low	Liver tissue sample = <10portal tracts are excluded. All biopsy specimens were analysed by two experienced pathologists blinded to the results of LSM and clinical data. Fibrosis stage was assessed independently on each histological section by both pathologists. Study found no significant difference between the two pathologists.

Study reference: Marcellin 2009A (TE)				
Lack of applicability	Are there concerns that the target condition as defined by the reference standard does not match the question?	No	Low	
Domain 4: Flow and timing				
Risk of bias	Was there an appropriate interval between index test and reference standard? Did all patients receive a reference standard?	Yes Yes	Low	TE was performed within 3 months of liver biopsy; although 93% of patients had liver biopsy and LSM within the same day or the day after.
Overall risk of bias Overall lack of applicability/indirectness	Unclear Low			15% patients excluded from the analysis.

Study reference: Myers 2003 (Fibrotest, Actitest)				
Domain 1: patient selection		Yes/No/ Unclear	Rating (Low, high, unclear)	Additional comments
Risk of bias	Was a consecutive or random sample of patients enrolled? Did the study include “difficult” to diagnose patients?	No No	High	Prospective patients 42/223 were enrolled according to individual physician practice (because measurement of these markers are not routine) Majority of patients were retrospective: selection bias – patients selected on the basis of the availability of stored serum) 9% (n=19) had HDV coinfection.
Lack of applicability	Are there concerns that the included patient and setting do not match the question?	No	Low	
Domain 2: index test				
Risk of bias	Were the index test results interpreted without knowledge of the results of the reference standard?	Unclear	Low	Several fixed thresholds were investigated. Not necessarily biased

Study reference: Myers 2003 (Fibrotest, Actitest)				
	Did the study pre-specify the threshold for a positive result?	No		
Lack of applicability	Are there concerns that the test technology, test methods and interpretation do not match the question?	No	Low	
Domain 3: reference standard				
Risk of bias	Is the reference standard likely to correctly classify the target condition? Were the reference standard results interpreted without knowledge of the results?	Yes Yes	Low	Single blinded pathologist analysed the biopsies.
Lack of applicability	Are there concerns that the target condition as defined by the reference standard does not match the question?	No	Low	
Domain 4: Flow and timing				
Risk of bias	Was there an appropriate interval between index test and reference standard? Did all patients receive a reference standard?	Yes Yes	Unclear	Up to 6 months between serum sample and liver biopsy (95% were within 3 months of biopsy) All included patients analysed
Optional domain: comparative accuracy studies				
Risk of bias	Did all patients undergo all index tests or were the index tests appropriately randomised amongst the patients? Were index tests conducted within a short time interval? Are index test results unaffected when undertaken together on the same patient?	Yes Yes Yes	Low	
Lack of applicability	Are there concerns that this study (both patients and test methods) does not match the question?	No	Low	

Study reference: Myers 2003 (Fibrotest, Actitest)				
Overall risk of bias Overall lack of applicability/indirectness	Very high Low			Selection bias and time between measurements and possible lack of blinding

Study reference: Myers 2010B (TE)				
Domain 1: patient selection		Yes/No/ Unclear	Rating (Low, high, unclear)	Additional comments
Risk of bias	Was a consecutive or random sample of patients enrolled? Did the study include “difficult” to diagnose patients?	Unclear No	Low	3.4% excluded for inadequate biopsy and 2.7% for failure of TE
Lack of applicability	Are there concerns that the included patient and setting do not match the question?	No	Low	4 hepatology centres in Canada
Domain 2: index test				
Risk of bias	Were the index test results interpreted without knowledge of the results of the reference standard? Did the study pre-specify the threshold for a positive result?	Unclear Yes	Low	Based on max. sum of sensitivity and specificity and results also given for standard thresholds.
Lack of applicability	Are there concerns that the test technology, test methods and interpretation do not match the question?	No	Low	
Domain 3: reference standard				
Risk of bias	Is the reference standard likely to correctly classify the target condition? Were the reference standard results interpreted without knowledge of the results?	Yes Yes	Low	Local pathologist analysed specimens blinded to TE results.
Lack of applicability	Are there concerns that the target condition as defined by the reference standard does not match the question?	No	Low	
Domain 4: Flow and timing				

Study reference: Myers 2010B (TE)				
Risk of bias	Was there an appropriate interval between index test and reference standard? Did all patients receive a reference standard?	No Yes	High	Up to 6 months (median 18 days) 9/68 (13%) excluded from the analysis
Overall risk of bias Overall indirectness/ lack of applicability	High Low			Interval between tests

Study reference: Poynard 2009 (Fibrotest, Actitest)				
Domain 1: patient selection		Yes/No/ Unclear	Rating (Low, high, unclear)	Additional comments
Risk of bias	Was a consecutive or random sample of patients enrolled? Did the study include “difficult” to diagnose patients?	No No	High	Patients were originally randomised into a RCT based on pre-specified selection criteria and only those with paired serum-biopsy tests were included in this subsequent retrospective study (462/695). Included patients reported to be similar to the overall population.
Lack of applicability	Are there concerns that the included patient and setting do not match the question?	No	Low	
Domain 2: index test				
Risk of bias	Were the index test results interpreted without knowledge of the results of the reference standard? Did the study pre-specify the threshold for a positive result?	Yes Yes	Low	Blindly assessed Used standard thresholds
Lack of applicability	Are there concerns that the test technology, test methods and interpretation do not match the question?	No	Low	
Domain 3: reference standard				

Study reference: Poynard 2009 (Fibrotest, Actitest)				
Risk of bias	Is the reference standard likely to correctly classify the target condition? Were the reference standard results interpreted without knowledge of the results?	Yes Unclear	Unclear	Liver specimens evaluated by independent histopathologist who was blinded to patients' treatment assignments or the timing of liver biopsy.
Lack of applicability	Are there concerns that the target condition as defined by the reference standard does not match the question?	No	Low	
Domain 4: Flow and timing				
Risk of bias	Was there an appropriate interval between index test and reference standard? Did all patients receive a reference standard?	Yes Yes	Low	Interval between serum and biopsy = <180 days (6 months).
Optional domain: comparative accuracy studies				
Risk of bias	Did all patients undergo all index tests or were the index tests appropriately randomised amongst the patients? Were index tests conducted within a short time interval? Are index test results unaffected when undertaken together on the same patient?	Yes Yes Yes	Low	
Lack of applicability	Are there concerns that this study (both patients and test methods) does not match the question?	No	Low	
Overall risk of bias Overall indirectness /lack of applicability	High Low			Retrospective, selected patients

Study reference: Raftopoulos 2012 (Fibrotest, APRI)				
Domain 1: patient selection		Yes/No/	Rating (Low, high,	Additional comments

Study reference: Raftopoulos 2012 (Fibrotest, APRI)				
		Unclear	unclear)	
Risk of bias	Was a consecutive or random sample of patients enrolled? Did the study include “difficult” to diagnose patients?	Yes (consecutive) No	Low	Reason for liver biopsy not stated
Lack of applicability	Are there concerns that the included patient and setting do not match the question?	Unclear	Unclear	Tertiary referral centre
Domain 2: index test				
Risk of bias	Were the index test results interpreted without knowledge of the results of the reference standard? Did the study pre-specify the threshold for a positive result?	Unclear Yes	Unclear	Optimal cut off values were chosen based on a max. sum of sensitivity and specificity; but results also given for previously published cutoffs
Lack of applicability	Are there concerns that the test technology, test methods and interpretation do not match the question?	No	Low	Both TE and APRI
Domain 3: reference standard				
Risk of bias	Is the reference standard likely to correctly classify the target condition? Were the reference standard results interpreted without knowledge of the results?	Yes Yes	Low	Liver biopsy is the gold standard for detecting liver fibrosis/cirrhosis Histopathologists were blinded to other data.
Lack of applicability	Are there concerns that the target condition as defined by the reference standard does not match the question?	No	Low	
Domain 4: Flow and timing				
Risk of bias	Was there an appropriate interval between index test and reference standard? Did all patients receive a reference standard?	Yes Yes	Low	Biochemical markers assessed at the time of the liver biopsy. Mean time between biopsy and serum collection of 0.8 (SD 1.5) months Some missing data, not sure of reason (33/179 – 18% - missing)

Study reference: Raftopoulos 2012 (Fibrotest, APRI)				
Optional domain: comparative accuracy studies				
Risk of bias	Did all patients undergo all index tests or were the index tests appropriately randomised amongst the patients? Were index tests conducted within a short time interval? Are index test results unaffected when undertaken together on the same patient?	Yes Yes Yes	Low	Partly – not all patients received the index test (18% missing data)
Lack of applicability	Are there concerns that this study (both patients and test methods) does not match the question?	No	Low	
Overall risk of bias Overall indirectness/lack of applicability	High (FT,APRI) Unclear			Unclear if blinded, 18% missing data Unclear if tertiary referral centre is generalizable

Study reference: Sebastiani 2007 (Fibrotest, APRI)				
Domain 1: patient selection		Yes/No/ Unclear	Rating (Low, high, unclear)	Additional comments
Risk of bias	Was a consecutive or random sample of patients enrolled? Did the study include “difficult” to diagnose patients?	Yes (consecutive) No	Unclear	7.3% with HDV coinfection Patients with biopsy samples shorter than 1.5cm were excluded; the number was not stated
Lack of applicability	Are there concerns that the included patient and setting do not match the question?	No	Low	
Domain 2: index test				
Risk of bias	Were the index test results interpreted without knowledge of the results of the reference standard? Did the study pre-specify the threshold for a positive result?	Unclear Unclear	Unclear	Unclear threshold for fibrotest (but stated to be those of the original reports) Pre-specified threshold for APRI

Study reference: Sebastiani 2007 (Fibrotest, APRI)				
Lack of applicability	Are there concerns that the test technology, test methods and interpretation do not match the question?	No	Low	
Domain 3: reference standard				
Risk of bias	Is the reference standard likely to correctly classify the target condition? Were the reference standard results interpreted without knowledge of the results?	Yes Yes	Low	Single pathologist blinded to clinical data.
Lack of applicability	Are there concerns that the target condition as defined by the reference standard does not match the question?	No	Low	
Domain 4: Flow and timing				
Risk of bias	Was there an appropriate interval between index test and reference standard? Did all patients receive a reference standard?	Yes Yes	Low	Fasting serum samples obtained and measured on the day of liver biopsy.
Optional domain: comparative accuracy studies				
Risk of bias	Did all patients undergo all index tests or were the index tests appropriately randomised amongst the patients? Were index tests conducted within a short time interval? Are index test results unaffected when undertaken together on the same patient?	Yes Yes Yes	Low	
Lack of applicability	Are there concerns that this study (both patients and test methods) does not match the question?	no	Low	
Domain 4: Flow and timing				
Risk of bias	Was there an appropriate interval between index test and reference standard? Did all patients receive a reference standard?	Yes Yes	Low	Lab data within 4 months f liver biopsy was used.

Study reference: Sebastiani 2007 (Fibrotest, APRI)				
Overall risk of bias Overall indirectness/lack of applicability	Unclear (Fibrotest) Unclear (APRI) Low			Unclear if many 'difficult to diagnose' patients were excluded

Study reference: Sebastiani 2011 (Fibrotest, APRI)				
Domain 1: patient selection		Yes/No/ Unclear	Rating (Low, high, unclear)	Additional comments
Risk of bias	Was a consecutive or random sample of patients enrolled? Did the study include "difficult" to diagnose patients?	Yes (consecutive) Unclear	Low	
Lack of applicability	Are there concerns that the included patient and setting do not match the question?	No	Low	
Domain 2: index test				
Risk of bias	Were the index test results interpreted without knowledge of the results of the reference standard? Did the study pre-specify the threshold for a positive result?	Unclear Yes	Unclear	Pre-specified thresholds
Lack of applicability	Are there concerns that the test technology, test methods and interpretation do not match the question?	No	Low	
Domain 3: reference standard				
Risk of bias	Is the reference standard likely to correctly classify the target condition? Were the reference standard results interpreted without knowledge of the results?	Yes Yes	Low	Local pathologist blinded to clinical data.
Lack of applicability	Are there concerns that the target condition as	No	Low	

Study reference: Sebastiani 2011 (Fibrotest, APRI)				
	defined by the reference standard does not match the question?			
Domain 4: Flow and timing				
Risk of bias	Was there an appropriate interval between index test and reference standard? Did all patients receive a reference standard?	Yes Yes	Low	Fasting serum samples obtained and measured on the day of liver biopsy.
Optional domain: comparative accuracy studies				
Risk of bias	Did all patients undergo all index tests or were the index tests appropriately randomised amongst the patients? Were index tests conducted within a short time interval? Are index test results unaffected when undertaken together on the same patient?	Yes Yes Yes	Low	
Lack of applicability	Are there concerns that this study (both patients and test methods) does not match the question?	no	Low	
Domain 4: Flow and timing				
Risk of bias	Was there an appropriate interval between index test and reference standard? Did all patients receive a reference standard?	Yes Yes	Low	
Overall risk of bias Overall indirectness/lack of applicability	Unclear (Fibrotest) Unclear (APRI) Low			Unclear blinding

Study reference: Seto 2011 (APRI)				
Domain 1: patient selection		Yes/No/ Unclear	Rating (Low, high,	Additional comments

Study reference: Seto 2011 (APRI)				
			unclear)	
Risk of bias	Was a consecutive or random sample of patients enrolled? Did the study include “difficult” to diagnose patients?	Unclear Unclear	High	Training and validation groups. Retrospective analysis from a trial – enrolled based on prespecified selection criteria and randomised into 2 drug arms. Patients included if had all the 12 clinical parameters –unclear how many excluded
Lack of applicability	Are there concerns that the included patient and setting do not match the question?	Unclear	Unclear	
Domain 2: index test				
Risk of bias	Were the index test results interpreted without knowledge of the results of the reference standard? Did the study pre-specify the threshold for a positive result?	Unclear Yes	Unclear	Standard values used
Lack of applicability	Are there concerns that the test technology, test methods and interpretation do not match the question?	No	Low	
Domain 3: reference standard				
Risk of bias	Is the reference standard likely to correctly classify the target condition? Were the reference standard results interpreted without knowledge of the results?	Yes Yes	Low	Knodell/Ishak Single pathologist blinded to lab data.
Lack of applicability	Are there concerns that the target condition as defined by the reference standard does not match the question?	No	Low	
Domain 4: Flow and timing				
Risk of bias	Was there an appropriate interval between index test and reference standard? Did all patients receive a reference standard?	Yes Yes	Low	Lab parameters obtained at the time of liver biopsy Patients with liver biopsy were included

Study reference: Seto 2011 (APRI)				
Overall risk of bias Overall indirectness/lack of applicability	High Low			Risk of selection bias, patients only included if they had 12 clinical parameters

Study reference: Shin 2008 (APRI)				
Domain 1: patient selection		Yes/No/ Unclear	Rating (Low, high, unclear)	Additional comments
Risk of bias	Was a consecutive or random sample of patients enrolled? Did the study include “difficult” to diagnose patients?	Yes No	High	Training and validation groups. 73/337 (22%) excluded because biopsy specimens had fewer than 6 portal fields
Lack of applicability	Are there concerns that the included patient and setting do not match the question?	No	Low	
Domain 2: index test				
Risk of bias	Were the index test results interpreted without knowledge of the results of the reference standard? Did the study pre-specify the threshold for a positive result?	Unclear Unclear	Unclear	Standard cut-offs included, so probably benefit of the doubt
Lack of applicability	Are there concerns that the test technology, test methods and interpretation do not match the question?	No	Low	
Domain 3: reference standard				
Risk of bias	Is the reference standard likely to correctly classify the target condition? Were the reference standard results interpreted without knowledge of the results?	Yes Yes	Low	Single blinded pathologist
Lack of applicability	Are there concerns that the target condition as defined by the reference standard does not match	No	Low	

Study reference: Shin 2008 (APRI)				
	the question?			
Domain 4: Flow and timing				
Risk of bias	Was there an appropriate interval between index test and reference standard? Did all patients receive a reference standard?	Unclear Yes	Unclear	73 patients excluded from the analysis because biopsy specimens had <6 portal fields.
Overall risk of bias Overall indirectness/ lack of applicability	High Low			Excluded patients 22% (selection bias)

Study reference: Verveer 2012 (TE)				
Domain 1: patient selection		Yes/No/ Unclear	Rating (Low, high, unclear)	Additional comments
Risk of bias	Was a consecutive or random sample of patients enrolled? Did the study include “difficult” to diagnose patients?	Yes (consecutive) No	High	Patients excluded if they had unreliable TE measurements 50/435 (11%), or if they had inadequate biopsies 133/435 (31%) and 11 had missing data
Lack of applicability	Are there concerns that the included patient and setting do not match the question?	No	Low	
Domain 2: index test				
Risk of bias	Were the index test results interpreted without knowledge of the results of the reference standard? Did the study pre-specify the threshold for a positive result?	Yes No	Unclear	TE assessment performed before liver biopsy. Threshold on basis of Youden index and minimum of 90% sensitivity – not necessarily biased
Lack of applicability	Are there concerns that the test technology, test methods and interpretation do not match the question?	No	Low	
Domain 3: reference standard				
Risk of bias	Is the reference standard likely to correctly classify	Yes	Low	Not stated whether

Study reference: Verveer 2012 (TE)				
	the target condition? Were the reference standard results interpreted without knowledge of the results?	Unclear		Adequate LB = at least 2cm with >12 portal tracts.2 heptologists were blinded
Lack of applicability	Are there concerns that the target condition as defined by the reference standard does not match the question?	No	Low	
Domain 4: Flow and timing				
Risk of bias	Was there an appropriate interval between index test and reference standard? Did all patients receive a reference standard?	Unclear Yes	Unclear	Conducted during the same session
Overall risk of bias Overall indirectness/lack of applicability	High Low			Selection of patients – 31% excluded because no biopsy available

Study reference: Vigano 2011A (TE)				
Domain 1: patient selection		Yes/No/ Unclear	Rating (Low, high, unclear)	Additional comments
Risk of bias	Was a consecutive or random sample of patients enrolled? Did the study include “difficult” to diagnose patients?	Yes (consecutive) Yes mainly	Low	Training group and validation group (overall cohort was reported). 3% excluded from the analysis because of unreliable TE results
Lack of applicability	Are there concerns that the included patient and setting do not match the question?	No	Low	
Domain 2: index test				
Risk of bias	Were the index test results interpreted without knowledge of the results of the reference standard? Did the study pre-specify the threshold for a positive result?	Yes No	High	TE assessment performed by 3 experienced hepatologists who were blinded to clinical, biochemical and histological data. Confirmatory threshold (with specificity >90% and LR+ ≥10; exclusion

Study reference: Vigano 2011A (TE)				
				threshold (with sensitivity >90% and LR-≤0.1)
Lack of applicability	Are there concerns that the test technology, test methods and interpretation do not match the question?	No	Low	
Domain 3: reference standard				
Risk of bias	Is the reference standard likely to correctly classify the target condition? Were the reference standard results interpreted without knowledge of the results?	Yes Yes	Low	Liver biopsy was carried out by 2 experienced hepatologists and results were read by a pathologist blind to TE and clinical data. Adequate LB = at least 2cm with >12 portal tracts.
Lack of applicability	Are there concerns that the target condition as defined by the reference standard does not match the question?	No	Low	
Domain 4: Flow and timing				
Risk of bias	Was there an appropriate interval between index test and reference standard? Did all patients receive a reference standard?	Unclear Yes	Unclear	3% excluded from the analysis
Overall risk of bias Overall indirecness/lack of applicability	High Low			Selection of threshold, but not necessarily always risk of bias (i.e. not for AUC)

Study reference: Wai 2006 (APRI)				
Domain 1: patient selection		Yes/No/ Unclear	Rating (Low, high, unclear)	Additional comments
Risk of bias	Was a consecutive or random sample of patients	Yes (consecutive	Unclear	Training and validation group

Study reference: Wai 2006 (APRI)				
	enrolled? Did the study include "difficult" to diagnose patients?	) Unclear		Patients who had had a liver biopsy were included; retrospective analysis
Lack of applicability	Are there concerns that the included patient and setting do not match the question?	Unclear	Unclear	Unclear why patients had a biopsy
Domain 2: index test				
Risk of bias	Were the index test results interpreted without knowledge of the results of the reference standard? Did the study pre-specify the threshold for a positive result?	Unclear N/A	Unclear	
Lack of applicability	Are there concerns that the test technology, test methods and interpretation do not match the question?	No	Low	
Domain 3: reference standard				
Risk of bias	Is the reference standard likely to correctly classify the target condition? Were the reference standard results interpreted without knowledge of the results?	Yes Yes	Low	Reviewed by one pathologist, blinded to the clinical characteristics of the patients.
Lack of applicability	Are there concerns that the target condition as defined by the reference standard does not match the question?	No	Low	
Domain 4: Flow and timing				
Risk of bias	Was there an appropriate interval between index test and reference standard? Did all patients receive a reference standard?	No Yes	High	Lab results performed up to 4 months before liver biopsy were used. 159 patients excluded because of prior or concurrent treatment (pop. is treatment naïve)
Overall risk of bias Overall indirectness / lack of applicability	Very high Low			Retrospective analysis, time between tests

Study reference: Wong 2010 (TE, APRI)				
Domain 1: patient selection		Yes/No/ Unclear	Rating (Low, high, unclear)	Additional comments
Risk of bias	Was a consecutive or random sample of patients enrolled? Did the study include “difficult” to diagnose patients?	Unclear Not stated	Unclear	Training and validation groups
Lack of applicability	Are there concerns that the included patient and setting do not match the question?	Unclear	Unclear	Patients with serum ALT above 5 x ULN were excluded
Domain 2: index test				
Risk of bias	Were the index test results interpreted without knowledge of the results of the reference standard? Did the study pre-specify the threshold for a positive result?	Unclear No	High	Appeared to be prespecified for one cutoff. However, an algorithm based on different thresholds for different ALT levels was used. No details about APRI
Lack of applicability	Are there concerns that the test technology, test methods and interpretation do not match the question?	No	Low	
Domain 3: reference standard				
Risk of bias	Is the reference standard likely to correctly classify the target condition? Were the reference standard results interpreted without knowledge of the results?	Yes Yes	Low	Blinded to patients’ clinical data. Adequate of liver specimen >1.5cm and at least 6 portal tracts.
Lack of applicability	Are there concerns that the target condition as defined by the reference standard does not match the question?	No	Low	

Study reference: Wong 2010 (TE, APRI)				
Domain 4: Flow and timing				
Risk of bias	Was there an appropriate interval between index test and reference standard? Did all patients receive a reference standard?	Yes Yes	Low	TE performed within 1 week of liver biopsy
Optional domain: comparative accuracy studies				
Risk of bias	Did all patients undergo all index tests or were the index tests appropriately randomised amongst the patients? Were index tests conducted within a short time interval? Are index test results unaffected when undertaken together on the same patient?	Yes Unclear Yes	Unclear	APRI gave few details
Lack of applicability	Are there concerns that this study (both patients and test methods) does not match the question?	No	Low	
Overall risk of bias Overall indirectness/ lack of applicability	High (TE) High (APRI) Low			Use of algorithm for TE with potentially biased thresholds

Study reference: Wu 2010A (APRI)				
Domain 1: patient selection		Yes/No/ Unclear	Rating (Low, high, unclear)	Additional comments
Risk of bias	Was a consecutive or random sample of patients enrolled? Did the study include “difficult” to diagnose patients?	Yes (consecutive) Unclear	Unclear	Retrospective analysis. Reason for liver biopsy unclear
Lack of applicability	Are there concerns that the included patient and setting do not match the question?	No	Low	

Study reference: Wu 2010A (APRI)				
Domain 2: index test				
Risk of bias	Were the index test results interpreted without knowledge of the results of the reference standard? Did the study pre-specify the threshold for a positive result?	Unclear Yes	Unclear	
Lack of applicability	Are there concerns that the test technology, test methods and interpretation do not match the question?	No	Low	
Domain 3: reference standard				
Risk of bias	Is the reference standard likely to correctly classify the target condition? Were the reference standard results interpreted without knowledge of the results?	Unclear Unclear	High	Blinding not stated in the study Details on measurement of liver biopsy not clear in the study.
Lack of applicability	Are there concerns that the target condition as defined by the reference standard does not match the question?	No	Low	
Domain 4: Flow and timing				
Risk of bias	Was there an appropriate interval between index test and reference standard? Did all patients receive a reference standard?	Yes Yes	Low	Serum sample and LB obtained at admission.
Overall risk of bias Overall indirectness / lack of applicability	Very high Low			Retrospective analysis, no details on blinding, reference standard measurement unclear

Study reference: Yilmaz 2011 (APRI)				
Domain 1: patient selection		Yes/No/ Unclear	Rating (Low, high, unclear)	Additional comments

Study reference: Yilmaz 2011 (APRI)				
Risk of bias	Was a consecutive or random sample of patients enrolled? Did the study include "difficult" to diagnose patients?	Unclear Unclear	Unclear	Retrospective study – all patients had liver biopsy but unclear how selected
Lack of applicability	Are there concerns that the included patient and setting do not match the question?	Unclear	Unclear	Uncertain about whether the patients were treatment naïve or if they were receiving treatment between reference standard and index test.
Domain 2: index test				
Risk of bias	Were the index test results interpreted without knowledge of the results of the reference standard? Did the study pre-specify the threshold for a positive result?	Unclear No	Unclear	Optimal cut off point chosen from the ROC curve
Lack of applicability	Are there concerns that the test technology, test methods and interpretation do not match the question?	No	Low	
Domain 3: reference standard				
Risk of bias	Is the reference standard likely to correctly classify the target condition? Were the reference standard results interpreted without knowledge of the results?	Yes Yes	Low	Pathologist blinded to patients' details and clinical data.
Lack of applicability	Are there concerns that the target condition as defined by the reference standard does not match the question?	Yes	High	Fibrosis F1-4 vs. no fibrosis (usually defined as at least F2.
Domain 4: Flow and timing				
Risk of bias	Was there an appropriate interval between index test and reference standard? Did all patients receive a reference standard?	Unclear Yes	Unclear	
Overall risk of bias Overall indirectness/ lack of	Very High High			Retrospective, may be selection bias, incorrect target condition (F1-4 versus

Study reference: Yilmaz 2011 (APRI)				
applicability				F0)

Study reference: Zhang 2008 (APRI)				
Domain 1: patient selection		Yes/No/ Unclear	Rating (Low, high, unclear)	Additional comments
Risk of bias	Was a consecutive or random sample of patients enrolled? Did the study include “difficult” to diagnose patients?	Yes (consecutive) Unclear	Low	Unclear why patients had biopsy
Lack of applicability	Are there concerns that the included patient and setting do not match the question?	No	Low	
Domain 2: index test				
Risk of bias	Were the index test results interpreted without knowledge of the results of the reference standard? Did the study pre-specify the threshold for a positive result?	Unclear yes	Low	
Lack of applicability	Are there concerns that the test technology, test methods and interpretation do not match the question?	No	Low	
Domain 3: reference standard				
Risk of bias	Is the reference standard likely to correctly classify the target condition? Were the reference standard results interpreted without knowledge of the results?	Yes Yes	Low	Reference standard completed first
Lack of applicability	Are there concerns that the target condition as defined by the reference standard does not match the question?	No	Low	
Domain 4: Flow and timing				
Risk of bias	Was there an appropriate interval between index test and reference standard?	Yes	Low	Serum samples within 2 weeks after live biopsy

Study reference: Zhang 2008 (APRI)				
	Did all patients receive a reference standard?	Yes		
Overall risk of bias Overall indirectness / lack of applicability	Low Low			

Study reference: Zhu 2011 (APRI, TE)				
Domain 1: patient selection		Yes/No/ Unclear	Rating (Low, high, unclear)	Additional comments
Risk of bias	Was a consecutive or random sample of patients enrolled? Did the study include “difficult” to diagnose patients?	Yes (consecutive) Assumed no	Unclear	For TE test: the median LSM with IQR >30% median values were excluded from analysis; 146/175 (83%) included in the analysis – reasons not stated explicitly. Same proportion for APRI test
Lack of applicability	Are there concerns that the included patient and setting do not match the question?	No	Low	
Domain 2: index test				
Risk of bias	Were the index test results interpreted without knowledge of the results of the reference standard? Did the study pre-specify the threshold for a positive result?	Yes No	unclear for TE; low for APRI	Operators were blinded and there were two independent trained operators for TE. Unclear if blinding for APRI Optimal cut off values were chosen for TE based on a max. sum of sensitivity and specificity; standard threshold for APRI. Not necessarily bias
Lack of applicability	Are there concerns that the test technology, test methods and interpretation do not match the question?	No	Low	Both TE and APRI applicable
Domain 3: reference standard				

Study reference: Zhu 2011 (APRI, TE)				
Risk of bias	Is the reference standard likely to correctly classify the target condition? Were the reference standard results interpreted without knowledge of the results?	Yes Yes	Low	Liver biopsy is the gold standard for detecting liver fibrosis/cirrhosis Pathologist was blinded to other data and reference standard conducted first
Lack of applicability	Are there concerns that the target condition as defined by the reference standard does not match the question?	No	Low	
Domain 4: Flow and timing				
Risk of bias	Was there an appropriate interval between index test and reference standard? Did all patients receive a reference standard?	Yes Yes	Low	LSM – two sets of measurement within 24 hours of liver biopsy APRI – clinical parameters measured within 7 days of liver biopsy Only 83% analysed
Optional domain: comparative accuracy studies				
Risk of bias	Did all patients undergo all index tests or were the index tests appropriately randomised amongst the patients? Were index tests conducted within a short time interval? Are index test results unaffected when undertaken together on the same patient?	Yes Yes Yes	Low	
Lack of applicability	Are there concerns that this study (both patients and test methods) does not match the question?	No	Low	
Overall risk of bias Overall lack of applicability/indirectness	Unclear (TE,APRI) Low (TE, APRI)			Depends if 17% 'difficult to diagnose patients' is important

CHILDREN

Study reference: Sokucu 2010 (Fibrotest, Actitest) CHILDREN				
Domain 1: patient selection		Yes/No/ Unclear	Rating (Low, high, unclear)	Additional comments
Risk of bias	Was a consecutive or random sample of patients enrolled? Did the study include “difficult” to diagnose patients?	Yes Yes	Low	Small sample size (N=25)
Lack of applicability	Are there concerns that the included patient and setting do not match the question?	Unclear	Unclear	All had vertically transmitted HBV
Domain 2: index test				
Risk of bias	Were the index test results interpreted without knowledge of the results of the reference standard? Did the study pre-specify the threshold for a positive result?	Yes Yes	Low	FT analyses performed independently of the histological analyses and analyst was unaware of the histological data
Lack of applicability	Are there concerns that the test technology, test methods and interpretation do not match the question?	No	Low	
Domain 3: reference standard				
Risk of bias	Is the reference standard likely to correctly classify the target condition? Were the reference standard results interpreted without knowledge of the results?	Yes Yes	Low	Analysed by a single-blinded pathologist (all samples were adequate, >5 portal tracts)
Lack of applicability	Are there concerns that the target condition as defined by the reference standard does not match the question?	No	Low	
Domain 4: Flow and timing				
Risk of bias	Was there an appropriate interval between index	Unclear	Unclear	

Study reference: Sokucu 2010 (Fibrotest, Actitest) CHILDREN				
	test and reference standard? Did all patients receive a reference standard?	Yes		
Optional domain: comparative accuracy studies				
Risk of bias	Did all patients undergo all index tests or were the index tests appropriately randomised amongst the patients? Were index tests conducted within a short time interval? Are index test results unaffected when undertaken together on the same patient?	Yes Yes Yes	Low	
Lack of applicability	Are there concerns that this study (both patients and test methods) does not match the question?	No	Low	
Overall risk of bias Overall indirectness/ lack of applicability	Low Unclear			Only limitation was small size (n=25) Unclear if representative group

Study reference: McGoogan 2010 (APRI) **CHILDREN**				
Domain 1: patient selection		Yes/No/ Unclear	Rating (Low, high, unclear)	Additional comments
Risk of bias	Was a consecutive or random sample of patients enrolled? Did the study include “difficult” to diagnose patients?	No No	High	Small sample size (HBV N=11); data selected from databases Patients with complete data were included.
Lack of applicability	Are there concerns that the included patient and setting do not match the question?	Yes	High	Diagnostic accuracy data (except AUC) were reported for HBV and HCV mixed populations (69% HCV). Uncertain whether HCV and HBV patient characteristics were different

Study reference: McGoogan 2010 (APRI) **CHILDREN**				
				(Details of baseline characteristics inadequate
Domain 2: index test				
Risk of bias	Were the index test results interpreted without knowledge of the results of the reference standard? Did the study pre-specify the threshold for a positive result?	Unclear Yes	Unclear	
Lack of applicability	Are there concerns that the test technology, test methods and interpretation do not match the question?	No	Low	
Domain 3: reference standard				
Risk of bias	Is the reference standard likely to correctly classify the target condition? Were the reference standard results interpreted without knowledge of the results?	Unclear Unclear	Unclear	6 patients had a dictated pathology report that did not assign a METAVIR score, In those cases, one investigator blinded to the patients' historical data, used the elements of the report to assign a METAVIR score range. intra-interobserver variability of pathologists examining biopsy samples. No consideration of inflammatory activity.
Domain 4: Flow and timing				
Risk of bias	Was there an appropriate interval between index test and reference standard? Did all patients receive a reference standard?	Unclear Yes	Unclear	Laboratory data within 4 months of biopsy were used
Overall risk of bias Overall applicability	Very high Indirect			Selection of patients, unclear blinding, time between tests Mainly Hepatitis C patients for sensitivity and specificity

N.2 Monitoring

Study identification **Chu 2007; Predictive factors for reactivation of hepatitis B following hepatitis B e Antigen seroconversion in chronic hepatitis B**				
Guideline topic: Hepatitis B		Review question no: How frequently should monitoring tests be done to ascertain virological, serological and biochemical response and resolution of fibrosis (HBeAg and antibody, HBsAg and antibody and transient elastography) and resistance (HBV DNA) in people with chronic hepatitis B?		
Checklist completed by:				
		Circle one option for each question		
1.1	The study sample represents the population of interest with regard to key characteristics, sufficient to limit potential bias to the results	Yes	No	Unclear
1.2	Loss to follow-up is unrelated to key characteristics (that is, the study data adequately represent the sample), sufficient to limit potential bias	Yes	No	Unclear
1.3	The prognostic factor of interest is adequately measured in study participants, sufficient to limit potential bias	Yes	No	Unclear
1.4	The outcome of interest is adequately measured in study participants, sufficient to limit bias	Yes	No	Unclear
1.5	Important potential confounders are appropriately accounted for, limiting potential bias with respect to the prognostic factor of interest	Yes	No	Unclear
1.6	The statistical analysis is appropriate for the design of the study, limiting potential for the presentation of invalid results	Yes	No	Unclear
	Overall – low risk of bias			

Study identification **Feld et al. Hepatitis B virus DNA prediction rules for hepatitis B e antigen-negative chronic hepatitis B. Hepatology. 2007; 46:1057-1070**

Study identification **Feld et al. Hepatitis B virus DNA prediction rules for hepatitis B e antigen-negative chronic hepatitis B. Hepatology. 2007; 46:1057-1070**					
		Circle one option for each question			Additional comments/notes
1.1	The study sample represents the population of interest with regard to key characteristics, sufficient to limit potential bias to the results	Yes	No	Unclear	Source of sample stated. Inclusion/exclusion criteria stated. N lost to F/U stated with reasons.
1.2	Loss to follow-up is unrelated to key characteristics (that is, the study data adequately represent the sample), sufficient to limit potential bias	Yes	No	Unclear	3 refused to participate; 3 started antiviral therapy after initial study visit; 8 did not return for F/U after their first visit.
1.3	The prognostic factor of interest is adequately measured in study participants, sufficient to limit potential bias	Yes	No	Unclear	HBV DNA measured by PCR assay, Roche (accurate range of 500-200000 copies/mL)
1.4	The outcome of interest is adequately measured in study participants, sufficient to limit bias	Yes	No	Unclear	ALT elevation (>40IU/L) – adequately measured.
1.5	Important potential confounders are appropriately accounted for, limiting potential bias with respect to the prognostic factor of interest	Yes	No	Unclear	Adjusted for HBV DNA threshold of 10,000copies/mL.
1.6	The statistical analysis is appropriate for the design of the study, limiting potential for the presentation of invalid results	Yes	No	Unclear	Kaplan-Meier and Cox regression analyses (time to event).
	Overall risk of bias: HIGH				

Study identification **Kumar et al. Spontaneous increases in alanine aminotransferase levels in asymptomatic chronic hepatitis B virus-infected patients. Gastroenterology. 2009; 136:1272-1280**					
		Circle one option for each question			Additional comments/notes
1.1	The study sample represents the population of interest with regard to key characteristics, sufficient to limit potential bias to the results	Yes	No	Unclear	Source of sample stated. Inclusion/exclusion criteria stated.
1.2	Loss to follow-up is unrelated to key	Yes	No	Unclear	No loss to follow up.

Study identification **Kumar et al. Spontaneous increases in alanine aminotransferase levels in asymptomatic chronic hepatitis B virus-infected patients. Gastroenterology. 2009; 136:1272-1280**					
	characteristics (that is, the study data adequately represent the sample), sufficient to limit potential bias				
1.3	The prognostic factor of interest is adequately measured in study participants, sufficient to limit potential bias	Yes	No	Unclear	ALT measured adequately.
1.4	The outcome of interest is adequately measured in study participants, sufficient to limit bias	Yes	No	Unclear	ALT flare clearly defined.
1.5	Important potential confounders are appropriately accounted for, limiting potential bias with respect to the prognostic factor of interest	Yes	No	Unclear	
1.6	The statistical analysis is appropriate for the design of the study, limiting potential for the presentation of invalid results	Yes	No	Unclear	
	Overall risk of bias: LOW				

Study identification **Moucari 2009; Early Serum HbsAg Drop: A Strong Predictor of Sustained Virological Response to Pegylated Interferon Alfa-2a in HbeAg negative patients**				
Guideline topic: Hepatitis B		Review question no: How frequently should monitoring tests be done to ascertain virological, serological and biochemical response and resolution of fibrosis (HBeAg and antibody, HBsAg and antibody and transient elastography) and resistance (HBV DNA) in people with chronic hepatitis B?		
Checklist completed by:				
		Circle one option for each question		
1.1	The study sample represents the population of interest with regard to	Yes	No	Unclear

Study identification **Moucari 2009; Early Serum HbsAg Drop: A Strong Predictor of Sustained Virological Response to Pegylated Interferon Alfa-2a in HbeAg negative patients**				
	key characteristics, sufficient to limit potential bias to the results			
1.2	Loss to follow-up is unrelated to key characteristics (that is, the study data adequately represent the sample), sufficient to limit potential bias	Yes	No	Unclear
1.3	The prognostic factor of interest is adequately measured in study participants, sufficient to limit potential bias	Yes	No	Unclear
1.4	The outcome of interest is adequately measured in study participants, sufficient to limit bias	Yes	No	Unclear
1.5	Important potential confounders are appropriately accounted for, limiting potential bias with respect to the prognostic factor of interest	Yes	No	Unclear
1.6	The statistical analysis is appropriate for the design of the study, limiting potential for the presentation of invalid results	Yes	No	Unclear
	Overall high risk of bias			

Study identification **Fried 2008; HbeAg and Hepatitis B Virus DNA as Outcome Predictors During Therapy with Peginterferon Alfa-2a for HbeAg –Positive Chronic Hepatitis B**				
Guideline topic: Hepatitis B		Review question no: How frequently should monitoring tests be done to ascertain virological, serological and biochemical response and resolution of fibrosis (HBeAg and antibody, HBsAg and antibody and transient elastography) and resistance (HBV DNA) in people with chronic hepatitis B?		
Checklist completed by:				
		Circle one option for each question		
1.1	The study sample represents the population of interest with regard to key characteristics, sufficient to limit potential bias to the results	Yes	No	Unclear
1.2	Loss to follow-up is unrelated to key characteristics (that is, the study	Yes	No	Unclear

Study identification **Fried 2008; HbeAg and Hepatitis B Virus DNA as Outcome Predictors During Therapy with Peginterferon Alfa-2a for HbeAg –Positive Chronic Hepatitis B**				
	data adequately represent the sample), sufficient to limit potential bias			
1.3	The prognostic factor of interest is adequately measured in study participants, sufficient to limit potential bias	Yes	No	Unclear
1.4	The outcome of interest is adequately measured in study participants, sufficient to limit bias	Yes	No	Unclear
1.5	Important potential confounders are appropriately accounted for, limiting potential bias with respect to the prognostic factor of interest	Yes	No	Unclear
1.6	The statistical analysis is appropriate for the design of the study, limiting potential for the presentation of invalid results	Yes	No	Unclear
	Overall high risk of bias			

Study identification **Janssen 1994; Measurement of HbsAg to monitor hepatitis B viral replication in patients on a-interferon treatment**				
Guideline topic: Hepatitis B		Review question no: How frequently should monitoring tests be done to ascertain virological, serological and biochemical response and resolution of fibrosis (HBeAg and antibody, HBsAg and antibody and transient elastography) and resistance (HBV DNA) in people with chronic hepatitis B?		
Checklist completed by:				
		Circle one option for each question		
1.1	The study sample represents the population of interest with regard to key characteristics, sufficient to limit potential bias to the results	Yes	No	Unclear
1.2	Loss to follow-up is unrelated to key characteristics (that is, the study data adequately represent the sample), sufficient to limit potential bias	Yes	No	Unclear
1.3	The prognostic factor of interest is adequately measured in study	Yes	No	Unclear

Study identification **Janssen 1994; Measurement of HbsAg to monitor hepatitis B viral replication in patients on a-interferon treatment**				
	participants, sufficient to limit potential bias			
1.4	The outcome of interest is adequately measured in study participants, sufficient to limit bias	Yes	No	Unclear
1.5	Important potential confounders are appropriately accounted for, limiting potential bias with respect to the prognostic factor of interest	Yes	No	Unclear
1.6	The statistical analysis is appropriate for the design of the study, limiting potential for the presentation of invalid results	Yes	No	Unclear
#	Overall risk of bias unclear			

Study identification **Heijink 2000; Interferon-a therapy in chronic hepatits B: early monitoring of hepatits B e antigen may help to decide whether to stop or to prolong therapy**				
Guideline topic: Hepatitis B		Review question no: How frequently should monitoring tests be done to ascertain virological, serological and biochemical response and resolution of fibrosis (HBeAg and antibody, HBsAg and antibody and transient elastography) and resistance (HBV DNA) in people with chronic hepatitis B?		
Checklist completed by:				
		Circle one option for each question		
1.1	The study sample represents the population of interest with regard to key characteristics, sufficient to limit potential bias to the results	Yes	No	Unclear
1.2	Loss to follow-up is unrelated to key characteristics (that is, the study data adequately represent the sample), sufficient to limit potential bias	Yes	No	Unclear
1.3	The prognostic factor of interest is adequately measured in study participants, sufficient to limit potential bias	Yes	No	Unclear

Study identification **Heijink 2000; Interferon-a therapy in chronic hepatits B: early monitoring of hepatits B e antigen may help to decide whether to stop or to prolong therapy**				
1.4	The outcome of interest is adequately measured in study participants, sufficient to limit bias	Yes	No	Unclear
1.5	Important potential confounders are appropriately accounted for, limiting potential bias with respect to the prognostic factor of interest (outcome: response at 16 week standard interferon treatment)	Yes	No	Unclear
	Important potential confounders are appropriately accounted for, limiting potential bias with respect to the prognostic factor of interest (outcome: response at 32 week prolonged interferon treatment)	Yes	No	Unclear
1.6	The statistical analysis is appropriate for the design of the study, limiting potential for the presentation of invalid results (outcome: response at 16 week standard interferon treatment)	Yes	No	Unclear
	The statistical analysis is appropriate for the design of the study, limiting potential for the presentation of invalid results (outcome: response at 32 week prolonged interferon treatment)	Yes	No	Unclear
	Overall: low risk of bias for the outcome of response at 16 week standard interferon treatment Overall: high risk of bias for the outcome of response at 32 week prolonged interferon treatment			

Study identification **Perillo 1993; Monitoring of Antiviral Therapy with Quantitative Evaluation of HbeAg: A comparison with HBV DNA Testing**	
Guideline topic: Hepatitis B	Review question no: How frequently should monitoring tests be done to ascertain virological, serological and biochemical response and resolution of fibrosis (HBeAg and antibody, HBsAg and antibody and transient elastography) and resistance (HBV DNA) in people with chronic hepatitis B?

Study identification **Perillo 1993; Monitoring of Antiviral Therapy with Quantitative Evaluation of HbeAg: A comparison with HBV DNA Testing**				
Checklist completed by:				
		Circle one option for each question		
1.1	The study sample represents the population of interest with regard to key characteristics, sufficient to limit potential bias to the results	Yes	No	Unclear
1.2	Loss to follow-up is unrelated to key characteristics (that is, the study data adequately represent the sample), sufficient to limit potential bias	Yes	No	Unclear
1.3	The prognostic factor of interest is adequately measured in study participants, sufficient to limit potential bias	Yes	No	Unclear
1.4	The outcome of interest is adequately measured in study participants, sufficient to limit bias	Yes	No	Unclear
1.5	Important potential confounders are appropriately accounted for, limiting potential bias with respect to the prognostic factor of interest	Yes	No	Unclear
1.6	The statistical analysis is appropriate for the design of the study, limiting potential for the presentation of invalid results	Yes	No	Unclear
	Overall high risk of bias			

Study identification **Rijcborst 2010; Early On-Treatment Prediction of Response to Peginterferon Alfa-2a for HbeAg –Negative Chronic Hepatitis B Using HbsAg and HBV DNA levels**	
Guideline topic: Hepatitis B	Review question no: How frequently should monitoring tests be done to ascertain virological, serological and biochemical response and resolution of fibrosis (HBeAg and antibody, HBsAg and antibody and transient elastography) and resistance (HBV DNA) in people with chronic hepatitis B?
Checklist completed by:	

Study identification **Rijcborst 2010; Early On-Treatment Prediction of Response to Peginterferon Alfa-2a for HbeAg –Negative Chronic Hepatitis B Using HbsAg and HBV DNA levels**				
		Circle one option for each question		
1.1	The study sample represents the population of interest with regard to key characteristics, sufficient to limit potential bias to the results	Yes	No	Unclear
1.2	Loss to follow-up is unrelated to key characteristics (that is, the study data adequately represent the sample), sufficient to limit potential bias	Yes	No	Unclear
1.3	The prognostic factor of interest is adequately measured in study participants, sufficient to limit potential bias	Yes	No	Unclear
1.4	The outcome of interest is adequately measured in study participants, sufficient to limit bias	Yes	No	Unclear
1.5	Important potential confounders are appropriately accounted for, limiting potential bias with respect to the prognostic factor of interest	Yes	No	Unclear
1.6	The statistical analysis is appropriate for the design of the study, limiting potential for the presentation of invalid results	Yes	No	Unclear
	Overall unclear risk of bias			

Study identification **Baltayiannis; Interferon-a therapy in HbeAg-negative chronic hepatitis B: a long term prospective study from north-western Greece**				
Guideline topic: Hepatitis B		Review question no: How frequently should monitoring tests be done to ascertain virological, serological and biochemical response and resolution of fibrosis (HBeAg and antibody, HBsAg and antibody and transient elastography) and resistance (HBV DNA) in people with chronic hepatitis B?		
Checklist completed by:				
		Circle one option for each question		
1.1	The study sample represents the population of interest with regard to	Yes	No	Unclear

Study identification **Baltayiannis; Interferon-a therapy in HbeAg-negative chronic hepatitis B: a long term prospective study from north-western Greece**				
	key characteristics, sufficient to limit potential bias to the results			
1.2	Loss to follow-up is unrelated to key characteristics (that is, the study data adequately represent the sample), sufficient to limit potential bias	Yes	No	Unclear
1.3	The prognostic factor of interest is adequately measured in study participants, sufficient to limit potential bias	Yes	No	Unclear
1.4	The outcome of interest is adequately measured in study participants, sufficient to limit bias	Yes	No	Unclear
1.5	Important potential confounders are appropriately accounted for, limiting potential bias with respect to the prognostic factor of interest	Yes	No	Unclear
1.6	The statistical analysis is appropriate for the design of the study, limiting potential for the presentation of invalid results	Yes	No	Unclear
	Overall low risk of bias			

Study identification **Kim et al. Clinical outcomes of chronic hepatitis B patients with persistently detectable serum hepatitis B DNA during lamivudine therapy. Journal of Gastroenterology and Hepatology. 2007; 22:1220-1225**					
					Additional comments
1.1	The study sample represents the population of interest with regard to key characteristics, sufficient to limit potential bias to the results	Yes	No	Unclear	Recruitment method unclear Mixed population of HBeAg (+) and (-) Inclusion/exclusion clearly defined.
1.2	Loss to follow-up is unrelated to key characteristics (that is, the study data adequately represent the sample), sufficient to limit potential bias	Yes	No	Unclear	No loss to follow up
1.3	The prognostic factor of interest is adequately measured in study participants, sufficient to limit potential bias	Yes	No	Unclear	HBV DNA measured using solution-hybridisation assay kit (lower limit of detection = 2.83 x 105 copies/mL)
1.4	The outcome of interest is adequately measured in	Ye	No	Unclear	Viral breakthrough clearly defined.

Study identification Kim et al. Clinical outcomes of chronic hepatitis B patients with persistently detectable serum hepatitis B DNA during lamivudine therapy. Journal of Gastroenterology and Hepatology. 2007; 22:1220-1225					
	study participants, sufficient to limit bias	s			
1.5	Important potential confounders are appropriately accounted for, limiting potential bias with respect to the prognostic factor of interest	Yes	No	Unclear	
1.6	The statistical analysis is appropriate for the design of the study, limiting potential for the presentation of invalid results	Yes	No	Unclear	Kaplan-meier method and log rank test – to calculate cumulative rates of outcomes.
	Overall risk of bias: HIGH				

Study identification Wang et al. Stringent cessation criterion results in better durability of lamivudine treatment: a prospective clinical study in hepatitis B e antigen-positive chronic hepatitis B patients. Journal of Viral Hepatitis. 2010; 17: 298-304					
					Additional comments
1.1	The study sample represents the population of interest with regard to key characteristics, sufficient to limit potential bias to the results	Yes	No	Unclear	Recruitment method unclear Adequate sample size
1.2	Loss to follow-up is unrelated to key characteristics (that is, the study data adequately represent the sample), sufficient to limit potential bias	Yes	No	Unclear	Loss to follow up reasons not given.
1.3	The prognostic factor of interest is adequately measured in study participants, sufficient to limit potential bias	Yes	No	Unclear	HBV DNA measured by real time PCR
1.4	The outcome of interest is adequately measured in study participants, sufficient to limit bias	Yes	No	Unclear	Relapse definition was clearly described.
1.5	Important potential confounders are appropriately accounted for, limiting potential bias with respect to the prognostic factor of interest	Yes	No	Unclear	
1.6	The statistical analysis is appropriate for the design of the study, limiting potential for the presentation of invalid results	Yes	No	Unclear	Kaplan-meier method and log rank test – to calculate cumulative rates of outcomes. Confounders included in the multivariate model not give by paper.

Study identification **Wang et al. Stringent cessation criterion results in better durability of lamivudine treatment: a prospective clinical study in hepatitis B e antigen-positive chronic hepatitis B patients. Journal of Viral Hepatitis. 2010; 17: 298-304**					
	Overall risk of bias: HIGH				

Study identification **Gramenzi et al. Serum hepatitis B surface antigen monitoring in long-term lamivudine-treated hepatitis Bvirus patients. Journal of Viral Hepatitis. 2011; 18:e468-e474**					
					Additional comments
1.1	The study sample represents the population of interest with regard to key characteristics, sufficient to limit potential bias to the results	Yes	No	Unclear	Small sample size Retrospective study (from a trial)
1.2	Loss to follow-up is unrelated to key characteristics (that is, the study data adequately represent the sample), sufficient to limit potential bias	Yes	No	Unclear	
1.3	The prognostic factor of interest is adequately measured in study participants, sufficient to limit potential bias	Yes	No	Unclear	Quantitative HBsAg and HBV DNA
1.4	The outcome of interest is adequately measured in study participants, sufficient to limit bias	Yes	No	Unclear	Virologic breakthrough
1.5	Important potential confounders are appropriately accounted for, limiting potential bias with respect to the prognostic factor of interest	Yes	No	Unclear	
1.6	The statistical analysis is appropriate for the design of the study, limiting potential for the presentation of invalid results	Yes	No	Unclear	
	Overall risk of bias: HIGH				

Study identification **Jaroszewicz et al. HBsAg decrease and serum interferon-inducible protein-10 levels as predictive markers for HBsAg loss during treatment with nucleoside/nucleotide analogues. Antiviral Therapy. 2011; 16: 915-924**					
					Additional comments

Study identification **Jaroszewicz et al. HBsAg decrease and serum interferon-inducible protein-10 levels as predictive markers for HBsAg loss during treatment with nucleoside/nucleotide analogues. Antiviral Therapy. 2011; 16: 915-924**					
1.1	The study sample represents the population of interest with regard to key characteristics, sufficient to limit potential bias to the results	Yes	No	Unclear	Patients were on different NUC treatments and mixed HBeAg status.
1.2	Loss to follow-up is unrelated to key characteristics (that is, the study data adequately represent the sample), sufficient to limit potential bias	Yes	No	Unclear	
1.3	The prognostic factor of interest is adequately measured in study participants, sufficient to limit potential bias	Yes	No	Unclear	Quantitative HBsAg
1.4	The outcome of interest is adequately measured in study participants, sufficient to limit bias	Yes	No	Unclear	HBsAg clearance
1.5	Important potential confounders are appropriately accounted for, limiting potential bias with respect to the prognostic factor of interest	Yes	No	Unclear	
1.6	The statistical analysis is appropriate for the design of the study, limiting potential for the presentation of invalid results	Yes	No	Unclear	
	Overall risk of bias: HIGH				

Study identification **Thompson et al. Lamivudine resistance in patients with chronic hepatitis B: role of clinical and virological factors. Journal of Gastroenterology and Hepatology. 2007; 1078-1085**					
					Additional comments
1.1	The study sample represents the population of interest with regard to key characteristics, sufficient to limit potential bias to the results	Yes	No	Unclear	Exclusion criteria not stated. Mixed HBeAg status.
1.2	Loss to follow-up is unrelated to key characteristics (that is, the study data adequately represent the sample), sufficient to limit potential bias	Yes	No	Unclear	

Study identification **Thompson et al. Lamivudine resistance in patients with chronic hepatitis B: role of clinical and virological factors. Journal of Gastroenterology and Hepatology. 2007; 1078-1085**					
1.3	The prognostic factor of interest is adequately measured in study participants, sufficient to limit potential bias	Yes	No	Unclear	HBV DNA
1.4	The outcome of interest is adequately measured in study participants, sufficient to limit bias	Yes	No	Unclear	LAM resistance, an increase in viral load, with polymerase gene sequencing confirming LAM resistance
1.5	Important potential confounders are appropriately accounted for, limiting potential bias with respect to the prognostic factor of interest	Yes	No	Unclear	Multivariate analysis with adjustment factors stated in the paper.
1.6	The statistical analysis is appropriate for the design of the study, limiting potential for the presentation of invalid results	Yes	No	Unclear	Cox proportional hazard regression
	Overall risk of bias: LOW				

Study identification **Llop et al. Decrease in viral load at weeks 12 and 24 in patients with chronic hepatitis B treated with lamivudine or adefovir predicts virological response at week 48.Rev Esp Enferm Dig (Madrid). 2009; 101 (11):763-767**					
					Additional comments
1.1	The study sample represents the population of interest with regard to key characteristics, sufficient to limit potential bias to the results	Yes	No	Unclear	Mixed HBeAg population (largely negative)
1.2	Loss to follow-up is unrelated to key characteristics (that is, the study data adequately represent the sample), sufficient to limit potential bias	Yes	No	Unclear	No loss to F/U. Only patients with clinical data were included.
1.3	The prognostic factor of interest is adequately measured in study participants, sufficient to limit potential bias	Yes	No	Unclear	HBV DNA
1.4	The outcome of interest is adequately measured in study participants, sufficient to limit bias	Yes	No	Unclear	Virologic response adequately defined.
1.5	Important potential confounders are appropriately accounted for, limiting potential bias with respect to	Yes	No	Unclear	

Study identification **Llop et al. Decrease in viral load at weeks 12 and 24 in patients with chronic hepatitis B treated with lamivudine or adefovir predicts virological response at week 48.Rev Esp Enferm Dig (Madrid). 2009; 101 (11):763-767**					
	the prognostic factor of interest				
1.6	The statistical analysis is appropriate for the design of the study, limiting potential for the presentation of invalid results	Yes	No	Unclear	
	Overall risk of bias: HIGH				

Study identification **Park et al. Monitoring of HBeAg levels may help to predict the outcomes of lamivudine therapy for HBeAg positive chronic hepatitis B. Journal of Viral Hepatitis. 2005; 12:216-221.**					
					Additional comments
1.1	The study sample represents the population of interest with regard to key characteristics, sufficient to limit potential bias to the results	Yes	No	Unclear	Inclusion/exclusion adequately described.
1.2	Loss to follow-up is unrelated to key characteristics (that is, the study data adequately represent the sample), sufficient to limit potential bias	Yes	No	Unclear	No loss to follow up. Retrospective cohort.
1.3	The prognostic factor of interest is adequately measured in study participants, sufficient to limit potential bias	Yes	No	Unclear	qHBeAg levels
1.4	The outcome of interest is adequately measured in study participants, sufficient to limit bias	Yes	No	Unclear	HBeAg seroconversion and viral breakthrough clearly defined.
1.5	Important potential confounders are appropriately accounted for, limiting potential bias with respect to the prognostic factor of interest	Yes	No	Unclear	
1.6	The statistical analysis is appropriate for the design of the study, limiting potential for the presentation of invalid results	Yes	No	Unclear	Multivariate cox regression was carried out. Confounders included in the final model not given.
	Overall risk of bias: HIGH				

Study identification **Hsieh et al. Hepatitis B virus genotype B has an earlier emergence of lamivudine resistance than genotype C.Antiviral therapy. 2009; 14:1157-1163**					
					Additional comments
1.1	The study sample represents the population of interest with regard to key characteristics, sufficient to limit potential bias to the results	Yes	No	Unclear	Retrospective cohort. Small sample size.
1.2	Loss to follow-up is unrelated to key characteristics (that is, the study data adequately represent the sample), sufficient to limit potential bias	Yes	No	Unclear	No loss to follow up.
1.3	The prognostic factor of interest is adequately measured in study participants, sufficient to limit potential bias	Yes	No	Unclear	Genotype B and C
1.4	The outcome of interest is adequately measured in study participants, sufficient to limit bias	Yes	No	Unclear	Lamivudine resistance – genotypic resistance analysis was only performed whenever a biochemical breakthrough occurred, which was usually preceded by a few months of viral breakthrough. HBV DNA was assayed only when clinically indicated.
1.5	Important potential confounders are appropriately accounted for, limiting potential bias with respect to the prognostic factor of interest	Yes	No	Unclear	
1.6	The statistical analysis is appropriate for the design of the study, limiting potential for the presentation of invalid results	Yes	No	Unclear	Multivariate logistic regression
	Overall risk of bias: HIGH				

Study identification **Franca et al. The emergence of YMDD mutants precedes biochemical flare by 19 weeks in lamivudine-treated chronic hepatitis B patients: an opportunity for therapy reevaluation. Braz J Med Biol Res. 2007; 40(12): 1605-1614**					
					Additional comments
1.1	The study sample represents the population of interest with regard to key characteristics, sufficient to limit potential bias to the results	Yes	No	Unclear	Small sample size.

Study identification **Franca et al. The emergence of YMDD mutants precedes biochemical flare by 19 weeks in lamivudine-treated chronic hepatitis B patients: an opportunity for therapy reevaluation. Braz J Med Biol Res. 2007; 40(12): 1605-1614**					
1.2	Loss to follow-up is unrelated to key characteristics (that is, the study data adequately represent the sample), sufficient to limit potential bias	Yes	No	Unclear	No loss to follow up.
1.3	The prognostic factor of interest is adequately measured in study participants, sufficient to limit potential bias	Yes	No	Unclear	YMDD mutants
1.4	The outcome of interest is adequately measured in study participants, sufficient to limit bias	Yes	No	Unclear	ALT flare
1.5	Important potential confounders are appropriately accounted for, limiting potential bias with respect to the prognostic factor of interest	Yes	No	Unclear	
1.6	The statistical analysis is appropriate for the design of the study, limiting potential for the presentation of invalid results	Yes	No	Unclear	Not multivariate analysis
	Overall risk of bias: HIGH				

Study identification **Lee 2011A; Correlation of Serum Hepatitis B Surface Antigen Level With Response to Entecavir in Naïve Patients With Chronic Hepatitis B**				
Guideline topic: Hepatitis B		Review question no: How frequently should monitoring tests be done to ascertain virological, serological and biochemical response and resolution of fibrosis (HBeAg and antibody, HBsAg and antibody and transient elastography) and resistance (HBV DNA) in people with chronic hepatitis B?		
Checklist completed by:				
		Circle one option for each question		
1.1	The study sample represents the population of interest with regard to key characteristics, sufficient to limit potential bias to the results	Yes	No	Unclear
1.2	Loss to follow-up is unrelated to key characteristics (that is, the study data adequately represent the sample), sufficient to limit potential	Yes	No	Unclear

Study identification **Lee 2011A; Correlation of Serum Hepatitis B Surface Antigen Level With Response to Entecavir in Naïve Patients With Chronic Hepatitis B**				
	bias			
1.3	The prognostic factor of interest is adequately measured in study participants, sufficient to limit potential bias	Yes	No	Unclear
1.4	The outcome of interest is adequately measured in study participants, sufficient to limit bias	Yes	No	Unclear
1.5	Important potential confounders are appropriately accounted for, limiting potential bias with respect to the prognostic factor of interest (virological response)	Yes	No	Unclear
	Important potential confounders are appropriately accounted for, limiting potential bias with respect to the prognostic factor of interest (serological response)	Yes	No	Unclear
1.6	The statistical analysis is appropriate for the design of the study, limiting potential for the presentation of invalid results (virological response)	Yes	No	Unclear
	The statistical analysis is appropriate for the design of the study, limiting potential for the presentation of invalid results (serological response)	Yes	No	Unclear
	Overall: low risk of bias for both outcomes (virological, serologcial response)			

Study identification **Chon 2011; Partial virological response to entecavir in treatment-naïve patients with chronic hepatitis B**	
Guideline topic: Hepatitis B	Review question no: How frequently should monitoring tests be done to ascertain virological, serological and biochemical response and resolution of fibrosis (HBeAg and antibody, HBsAg and antibody and transient elastography) and resistance (HBV

Study identification **Chon 2011; Partial virological response to entecavir in treatment-naïve patients with chronic hepatitis B**				
		DNA) in people with chronic hepatitis B?		
Checklist completed by:				
		Circle one option for each question		
1.1	The study sample represents the population of interest with regard to key characteristics, sufficient to limit potential bias to the results	Yes	No	Unclear
1.2	Loss to follow-up is unrelated to key characteristics (that is, the study data adequately represent the sample), sufficient to limit potential bias	Yes	No	Unclear
1.3	The prognostic factor of interest is adequately measured in study participants, sufficient to limit potential bias	Yes	No	Unclear
1.4	The outcome of interest is adequately measured in study participants, sufficient to limit bias	Yes	No	Unclear
1.5	Important potential confounders are appropriately accounted for, limiting potential bias with respect to the prognostic factor of interest	Yes	No	Unclear
1.6	The statistical analysis is appropriate for the design of the study, limiting potential for the presentation of invalid results	Yes	No	Unclear
	Overall unclear risk of bias			

Study identification **Jung 2010A; Change in Serum Hepatitis B Surface Antigen Level and Its Clinical Significance in Treatment-naïve, Hepatitis B e Antigen- positive patients receiving entecavir**	
Guideline topic: Hepatitis B	Review question no: How frequently should monitoring tests be done to ascertain virological, serological and biochemical response and resolution of fibrosis (HBeAg and antibody, HBsAg and antibody and transient elastography) and resistance (HBV DNA) in people with chronic hepatitis B?
Checklist completed by:	
	Circle one option for each question

Study identification **Jung 2010A; Change in Serum Hepatitis B Surface Antigen Level and Its Clinical Significance in Treatment-naïve, Hepatitis B e Antigen- positive patients receiving entecavir**				
1.1	The study sample represents the population of interest with regard to key characteristics, sufficient to limit potential bias to the results	Yes	No	Unclear
1.2	Loss to follow-up is unrelated to key characteristics (that is, the study data adequately represent the sample), sufficient to limit potential bias	Yes	No	Unclear
1.3	The prognostic factor of interest is adequately measured in study participants, sufficient to limit potential bias	Yes	No	Unclear
1.4	The outcome of interest is adequately measured in study participants, sufficient to limit bias	Yes	No	Unclear
1.5	Important potential confounders are appropriately accounted for, limiting potential bias with respect to the prognostic factor of interest	Yes	No	Unclear
1.6	The statistical analysis is appropriate for the design of the study, limiting potential for the presentation of invalid results	Yes	No	Unclear
	Overall high risk of bias			

Study identification **Lee 2003; Quantitatve polymerase chain reaction assay for serum hepatits B virus DNA as a predictive factor for post-treatment relapse after lamivudine induced hepatitis B e antigen loss or seroconversion**				
Guideline topic: Hepatitis B		Review question no: How frequently should monitoring tests be done to ascertain virological, serological and biochemical response and resolution of fibrosis (HBeAg and antibody, HBsAg and antibody and transient elastography) and resistance (HBV DNA) in people with chronic hepatitis B?		
Checklist completed by:				
		Circle one option for each question		
1.1	The study sample represents the population of interest with regard to key characteristics, sufficient to limit potential bias to the results	Yes	No	Unclear
1.2	Loss to follow-up is unrelated to key characteristics (that is, the study	Yes	No	Unclear

Study identification **Lee 2003; Quantitatve polymerase chain reaction assay for serum hepatits B virus DNA as a predictive factor for post-treatment relapse after lamivudine induced hepatitis B e antigen loss or seroconversion**				
	data adequately represent the sample), sufficient to limit potential bias			
1.3	The prognostic factor of interest is adequately measured in study participants, sufficient to limit potential bias	Yes	No	Unclear
1.4	The outcome of interest is adequately measured in study participants, sufficient to limit bias	Yes	No	Unclear
1.5	Important potential confounders are appropriately accounted for, limiting potential bias with respect to the prognostic factor of interest	Yes	No	Unclear
1.6	The statistical analysis is appropriate for the design of the study, limiting potential for the presentation of invalid results	Yes	No	Unclear
	Overall high risk of bias			

Study identification **Lee 2002; Effect of virological response on post-treatment durability of lamivudine-induced HbeAg seroconversion**				
Guideline topic: Hepatitis B		Review question no: How frequently should monitoring tests be done to ascertain virological, serological and biochemical response and resolution of fibrosis (HBeAg and antibody, HBsAg and antibody and transient elastography) and resistance (HBV DNA) in people with chronic hepatitis B?		
Checklist completed by:				
		Circle one option for each question		
1.1	The study sample represents the population of interest with regard to key characteristics, sufficient to limit potential bias to the results	Yes	No	Unclear
1.2	Loss to follow-up is unrelated to key characteristics (that is, the study data adequately represent the sample), sufficient to limit potential bias	Yes	No	Unclear
1.3	The prognostic factor of interest is adequately measured in study participants, sufficient to limit potential bias	Yes	No	Unclear

Study identification **Lee 2002; Effect of virological response on post-treatment durability of lamivudine-induced HbeAg seroconversion**				
1.4	The outcome of interest is adequately measured in study participants, sufficient to limit bias	Yes	No	Unclear
1.5	Important potential confounders are appropriately accounted for, limiting potential bias with respect to the prognostic factor of interest	Yes	No	Unclear
1.6	The statistical analysis is appropriate for the design of the study, limiting potential for the presentation of invalid results	Yes	No	Unclear
	Overall high risk of bias			

Study identification **Wong 2004; Clinical course after stopping lamivudine in chronic hepatitis B patients with lamivudine-resistant mutants**				
Guideline topic: Hepatitis B		Review question no: How frequently should monitoring tests be done to ascertain virological, serological and biochemical response and resolution of fibrosis (HBeAg and antibody, HBsAg and antibody and transient elastography) and resistance (HBV DNA) in people with chronic hepatitis B?		
Checklist completed by:				
		Circle one option for each question		
1.1	The study sample represents the population of interest with regard to key characteristics, sufficient to limit potential bias to the results	Yes	No	Unclear
1.2	Loss to follow-up is unrelated to key characteristics (that is, the study data adequately represent the sample), sufficient to limit potential bias	Yes	No	Unclear
1.3	The prognostic factor of interest is adequately measured in study participants, sufficient to limit potential bias	Yes	No	Unclear
1.4	The outcome of interest is adequately measured in study participants, sufficient to limit bias	Yes	No	Unclear
1.5	Important potential confounders are appropriately accounted for, limiting potential bias with respect to the prognostic factor of interest	Yes	No	Unclear

Study identification **Wong 2004; Clinical course after stopping lamivudine in chronic hepatitis B patients with lamivudine-resistant mutants**				
1.6	The statistical analysis is appropriate for the design of the study, limiting potential for the presentation of invalid results	Yes	No	Unclear
	Overall high risk of bias			

Study identification **Nagata 1999; The role of HBV DNA quantitative PCR in monitoring the response to interferon treatment in chronic hepatitis B virus infection**				
Guideline topic: Hepatitis B		Review question no: How frequently should monitoring tests be done to ascertain virological, serological and biochemical response and resolution of fibrosis (HBeAg and antibody, HBsAg and antibody and transient elastography) and resistance (HBV DNA) in people with chronic hepatitis B?		
Checklist completed by:				
		Circle one option for each question		
1.1	The study sample represents the population of interest with regard to key characteristics, sufficient to limit potential bias to the results	Yes	No	Unclear
1.2	Loss to follow-up is unrelated to key characteristics (that is, the study data adequately represent the sample), sufficient to limit potential bias	Yes	No	Unclear
1.3	The prognostic factor of interest is adequately measured in study participants, sufficient to limit potential bias	Yes	No	Unclear
1.4	The outcome of interest is adequately measured in study participants, sufficient to limit bias	Yes	No	Unclear
1.5	Important potential confounders are appropriately accounted for, limiting potential bias with respect to the prognostic factor of interest	Yes	No	Unclear
1.6	The statistical analysis is appropriate for the design of the study, limiting potential for the presentation of invalid results	Yes	No	Unclear
	Overall high risk of bias			

Study identification **Arai 2012; Quantification of hepatitis B surface antigen can help predict spontaneous hepatitis B surface antigen seroclearance.**				
Guideline topic: Hepatitis B		Review question no: How frequently should monitoring tests be done to ascertain virological, serological and biochemical response and resolution of fibrosis (HBeAg and antibody, HBsAg and antibody and transient elastography) and resistance (HBV DNA) in people with chronic hepatitis B?		
Checklist completed by:				
		Circle one option for each question		
1.1	The study sample represents the population of interest with regard to key characteristics, sufficient to limit potential bias to the results	Yes	No	Unclear
1.2	Loss to follow-up is unrelated to key characteristics (that is, the study data adequately represent the sample), sufficient to limit potential bias	Yes	No	Unclear
1.3	The prognostic factor of interest is adequately measured in study participants, sufficient to limit potential bias	Yes	No	Unclear
1.4	The outcome of interest is adequately measured in study participants, sufficient to limit bias	Yes	No	Unclear
1.5	Important potential confounders are appropriately accounted for, limiting potential bias with respect to the prognostic factor of interest	Yes	No	Unclear
1.6	The statistical analysis is appropriate for the design of the study, limiting potential for the presentation of invalid results	Yes	No	Unclear
	Overall high risk of bias			

Study identification **Chan 2011; Prediction of off-treatment response to lamivudine by serum hepatitis B surface antigen quantification in hepatitis B e antigen-negative patients.**	
Guideline topic: Hepatitis B	Review question no: How frequently should monitoring tests be done to ascertain virological, serological and biochemical response and resolution of fibrosis (HBeAg and antibody, HBsAg

Study identification **Chan 2011; Prediction of off-treatment response to lamivudine by serum hepatitis B surface antigen quantification in hepatitis B e antigen-negative patients.**				
		and antibody and transient elastography) and resistance (HBV DNA) in people with chronic hepatitis B?		
Checklist completed by:				
		Circle one option for each question		
1.1	The study sample represents the population of interest with regard to key characteristics, sufficient to limit potential bias to the results	Yes	No	Unclear
1.2	Loss to follow-up is unrelated to key characteristics (that is, the study data adequately represent the sample), sufficient to limit potential bias	Yes	No	Unclear
1.3	The prognostic factor of interest is adequately measured in study participants, sufficient to limit potential bias	Yes	No	Unclear
1.4	The outcome of interest is adequately measured in study participants, sufficient to limit bias	Yes	No	Unclear
1.5	Important potential confounders are appropriately accounted for, limiting potential bias with respect to the prognostic factor of interest	Yes	No	Unclear
1.6	The statistical analysis is appropriate for the design of the study, limiting potential for the presentation of invalid results	Yes	No	Unclear
	Overall high risk of bias			

N.3 Surveillance

Study identification **Kim DY, Han KH et al. Semiannual surveillance for hepatocellular carcinoma improved patient survival compared to annual surveillance (Korean experience). 2007 Hepatology; 46 (4) Suppl 1; 403A**					
		Circle one option for each question			Additional comments/notes
1.1	The study sample represents the population of interest with regard to key characteristics, sufficient to limit potential bias to the results	Yes	No	Unclear	Source of sample stated. Inclusion/exclusion criteria stated. Retrospective study Mostly hep B patients (>70%) Inadequate information on patients characteristics
1.2	Loss to follow-up is unrelated to key characteristics (that is, the study data adequately represent the sample), sufficient to limit potential bias	Yes	No	Unclear	Not applicable
1.3	The prognostic factor of interest is adequately measured in study participants, sufficient to limit potential bias	Yes	No	Unclear	6 monthly or 12 monthly HCC surveillance using ultrasound and alpha fetoprotein.
1.4	The outcome of interest is adequately measured in study participants, sufficient to limit bias	Yes	No	Unclear	Diagnosis of HCC unclear
1.5	Important potential confounders are appropriately accounted for, limiting potential bias with respect to the prognostic factor of interest	Yes	No	Unclear	Not applicable
1.6	The statistical analysis is appropriate for the design of the study, limiting potential for the presentation of invalid results	Yes	No	Unclear	Abstract – inadequate description of statistical analysis
	Overall risk of bias: HIGH				

Study identification **Santi V and Trevisani F et al. Semiannual surveillance is superior to annual surveillance for the detection of early hepatocellular carcinoma and patient survival. Journal of Hepatology. 2010; 53: 291-297**

Study identification **Santi V and Trevisani F et al. Semiannual surveillance is superior to annual surveillance for the detection of early hepatocellular carcinoma and patient survival. Journal of Hepatology. 2010; 53: 291-297**					
		Circle one option for each question			Additional comments/notes
1.1	The study sample represents the population of interest with regard to key characteristics, sufficient to limit potential bias to the results	Yes	No	Unclear	Inclusion/exclusion criteria clearly described. Retrospective study 9.1% HBV patients (indirect)
1.2	Loss to follow-up is unrelated to key characteristics (that is, the study data adequately represent the sample), sufficient to limit potential bias	Yes	No	Unclear	Not applicable
1.3	The prognostic factor of interest is adequately measured in study participants, sufficient to limit potential bias	Yes	No	Unclear	6 monthly or 12 monthly HCC surveillance using ultrasound with or without alpha fetoprotein.
1.4	The outcome of interest is adequately measured in study participants, sufficient to limit bias	Yes	No	Unclear	
1.5	Important potential confounders are appropriately accounted for, limiting potential bias with respect to the prognostic factor of interest	Yes	No	Unclear	
1.6	The statistical analysis is appropriate for the design of the study, limiting potential for the presentation of invalid results	Yes	No	Unclear	
	Other comments: selection bias – determined by the subjective choice of the interval. Doctors tend to shorten the interval in patients that are likely at high risk of HCC, this would result in an increased number of higher risk patients submitted to a 6 monthly surveillance.				
	Overall risk of bias: HIGH (Indirect)				
Study identification Wang JH and Chang KC et al. 2011. Hepatocellular carcinoma surveillance with 4 versus 12 months interval for patients with chronic viral hepatitis – a randomised community study					
		Circle one option for each question			Additional comments/notes
1.1	The study sample represents the population of interest with regard to key characteristics,	Yes	No	Unclear	Inclusion/exclusion criteria inadequately described.

Study identification **Santi V and Trevisani F et al. Semiannual surveillance is superior to annual surveillance for the detection of early hepatocellular carcinoma and patient survival. Journal of Hepatology. 2010; 53: 291-297**					
	sufficient to limit potential bias to the results				Prospective study (abstract) Mixed HBV and HCV patients No information on patients characteristics
1.2	Loss to follow-up is unrelated to key characteristics (that is, the study data adequately represent the sample), sufficient to limit potential bias	Yes	No	Unclear	Not applicable
1.3	The prognostic factor of interest is adequately measured in study participants, sufficient to limit potential bias	Yes	No	Unclear	4 monthly or 12 monthly HCC surveillance using ultrasound and alpha fetoprotein.
1.4	The outcome of interest is adequately measured in study participants, sufficient to limit bias	Yes	No	Unclear	Diagnosis of HCC unclear (abstract)
1.5	Important potential confounders are appropriately accounted for, limiting potential bias with respect to the prognostic factor of interest	Yes	No	Unclear	Not applicable
1.6	The statistical analysis is appropriate for the design of the study, limiting potential for the presentation of invalid results	Yes	No	Unclear	Abstract – inadequate description of statistical analysis
	Overall risk of bias: VERY HIGH (Indirect)				

Appendix O: Diagnostics – 2x2 tables

O.1 Fibrotest

O.1.1 Fibrosis

Castera 2011 (threshold>0.48 - standard); calculated from numbers of patients positive and negative on reference standard and sensitivity 61%) and specificity (81%)

		Ref standard Positive F2-F4	Negative F0-F1	
Index test	positive	27	3	30
	negative	17	13	30
		44	16	60

Kim 2012B (threshold > 0.32 - optimal), calculated from numbers of patients positive and negative on reference standard and sensitivity (79.3%) and specificity (93.3%)

		Positive F2-F4	Negative F0-F1	
Index test	positive	130	2	132
	negative	34	28	62
		164	30	194

Myers 2003, calculated from numbers of patients positive and negative on reference standard and sensitivities (54%) and specificities at each threshold

		positive	negative	
Index test	>0.9	5	0	5
	>0.8-0.9	6	1	7
	>0.6-0.8	10	9	19
	>0.4-0.6	12	20	32
	>0.2-0.4	21	41	62
	≤0.2	7	77	84
		61	148	209

Poynard 2009 (threshold>0.48 - standard)

		Ref standard positive	negative	
Index test	positive	112	90	202
	negative	58	202	260
		170	292	462

Raftopoulos 2012 (threshold 0.48); calculated from total number of patients, the number above the threshold and the positive and negative predictive values.

		positive	negative	
Index test	positive	32	16	48
	negative	25	72	97
		57	88	145

Raftopoulos 2012 (threshold according to the highest Youden index >0.37); calculated from total number of patients, the numbers above the thresholds and the positive and negative predictive values.

		positive	negative	
Index	positive	38	30	68

test	negative	19	58	77
		57	88	145

Sebastiani 2007 (threshold≥ 0.48 (assumed) – standard cut-offs "as indicated in the original publications"); calculated from number with fibrosis and total number of patients, and sensitivity (80.8%) and specificity (90%)

		Ref Standard positive	Ref Standard negative	
Index	positive	61	3	64
test	negative	14	32	46
		75	35	110

Sebastiani 2011 (threshold≥ 0.49); calculated from number with and without fibrosis and sensitivity (54.2%) and specificity (83.3%)
NB the reported PPV (89%) and NPV (52.6%) don't completely agree with those calculated from this 2x2 table (81.4 and 57.1% respectively)

		Ref Standard positive	Ref Standard negative	
Index	positive	79	18	97
test	negative	67	89	156
		146	107	253

O.1.2 Cirrhosis

Castera 2011 (threshold>0.74 – standard); calculated from numbers of patients positive and negative on reference standard and sensitivity (47%) and specificity (91%)

		positive	negative	
Index	positive	7	4	11
test	negative	8	41	49
		15	45	60

Sebastiani 2007 (threshold>0.74 (assumed) – standard "as indicated in the original publications"; calculated from number with fibrosis and total number of patients, and sensitivity (55.6%) and specificity (96.3%)

		positive	negative	
Index	positive	12	3	15
test	negative	10	85	95
		22	88	110

Raftopoulos 2012 (threshold 0.73 - standard); calculated from total number of patients, the number above the threshold and the positive and negative predictive values.

		positive	negative	
Index	positive	7	15	22
test	negative	2	121	123
		9	136	145

Raftopoulos 2012 (threshold according to the highest Youden index >0.63); calculated from total number of patients, the numbers above the thresholds and the positive and negative predictive values.

		positive	negative	
Index	positive	7	25	32
test	negative	2	111	113
		9	136	145

Kim 2012B (threshold > 0.68 - optimal), calculated from numbers of patients positive and negative on reference standard and sensitivity (80.0%) and specificity (84.0%)

		Positive F4	Negative F0-F3	
Index	positive	60	19	79

test	negative	15	100	115
		75	119	194

Sebastiani 2011 (threshold≥ 0.75); calculated from number with and without cirrhosis and sensitivity (42.1%) and specificity (91.4%).
NB the reported PPV (76%) and NPV (86.4%) do not agree with this 2x2 table (51.4 and 88.0% respectively)

		Ref Standard positive	negative	
Index	positive	19	18	37
test	negative	26	190	216
		45	208	253

Myers 2003 and Poynard 2009 did not report on cirrhosis diagnosis.

O.2 Transient elastography

O.2.1 Fibrosis

Cardoso 2012 (threshold > 7.2kPa - standard), taken from2x2 table in the paper

		Positive F2-F4	Negative F0-F1	
Index	positive	63	14	77
test	negative	22	103	125
		85	117	202

Castera 2011 (threshold=>7.1kPa – optimal – c.f. Fibrotest in this study used at the standard cut-off); calculated from numbers of patients positive and negative on reference standard and sensitivity (68%) and specificity (63%)

		positive	negative	
Index	positive	30	6	36
test	negative	14	10	24
		44	16	60

Gaia 2011 (threshold>7.2kPa – optimal diagnostic accuracy); calculated from the numbers positive and negative on the reference standard, and the sensitivity (61%) and specificity (72%)

		positive	negative	
Index	positive	23	9	32
test	negative	14	24	38
		37	33	70

Kim 2012B (threshold > 8.8kPa: optimal cutoff), calculated from numbers of patients positive and negative on reference standard and sensitivity (78.0%) and specificity (86.7%)

		Positive F2-F4	Negative F0-F1	
Index	positive	128	4	132
test	negative	36	26	62
		164	30	194

Lesmana 2011 (threshold>5.85kPa - optimal); calculated from the number of patients positive on the reference standard, the total number of patients and the sensitivity (60.3%) and the specificity (63.6%)

		positive	negative	
Index	positive	44	16	60
test	negative	29	28	57
		73	44	117

Marcellin 2009 (threshold>7.2kPa - optimal sensitivity+specificity); calculated from the numbers positive and negative on the reference standard, and the sensitivity (70%) and specificity (83%)

		positive	negative	
Index	positive	61	15	76
test	negative	26	71	97
		87	86	173

Myers 2010 (threshold>7.7kPa – optimal); calculated from the number positive on the reference standard, the total number of patients and the sensitivity (61%) and specificity (78%)

		positive	negative	
Index	positive	19	8	27
test	negative	12	29	41
		31	37	68

Vigano 2011A (overall cohort); from table in the text

		positive	negative	
Index	>15	28	2	30
test	>10.1-15	35	3	38
	>5.1-10	64	69	133
	≤5 (3.4-5)	1	15	16
		128	89	217

Vigano 2011A training cohort (threshold > 8.7kPa – optimal); calculated from numbers reported in the text.

		Positive F2-F4	Negative F0-F1	
Index	positive	42	5	47
test	negative	24	54	78
		66	59	125

Zhu 2011 (threshold>7.9kPa – optimal); calculated from numbers positive and negative on the reference standard and the number of true negatives and the NPV.

		positive	negative	
Index	positive	73	9	82
test	negative	6	87	93
		79	96	175

Chan 2009, Chen 2012 Kim 2009, Kim 2010B, Verveer 2012 and Wong 2010 did not report on fibrosis.

O.2.2 Severe fibrosis

Chan 2009 (threshold=6kPa)

		positive	negative	
Index	positive	75	52	127
test	negative	3	31	34
		78	83	161

Chan 2009 (threshold=8.4kPa)

		positive	negative	
Index	positive	66	20	85
test	negative	12	63	76
		78	83	161

Chan 2009 (threshold=11.3kPa)

		positive	negative	
Index	positive	43	4	47
test	negative	35	79	114

		78	83	161

Lesmana 2011 (threshold=7kPa)

		positive	negative	
Index	positive	18	17	36
test	negative	10	72	81
		28	89	117

Cardoso 2012 (threshold > 8.1kPa - standard), taken from2x2 table in the paper

		Positive F3-F4	Negative F0-F2	
Index	positive	30	32	62
test	negative	4	136	140
		34	168	202

Marcellin 2009 (threshold=8.9kPa)

		positive	negative	
Index	positive	37	20	56
test	negative	6	111	117
		43	130	173

Marcellin 2009 (threshold=10.5kPa)

		positive	negative	
Index	positive	31	7	37
test	negative	12	124	136
		43	130	173

Gaia 2011 (threshold=8.9kPa)

		positive	negative	
Index	positive	17	7	24
test	negative	9	37	46
		26	44	70

Myers 2010 (threshold=10.3kPa)

		positive	negative	
Index	positive	6	11	17
test	negative	2	98	100
		8	109	117

Wong 2010 training group (threshold=<6 for normal ALT group and <7.5 for elevated ALT group)

		positive	negative	
Index	positive	70	9	79
test	negative	4	12	16
		74	21	156

Wong 2010 validation group (threshold=<6 for normal ALT group and <7.5 for elevated ALT group)

		positive	negative	
Index	positive	17	24	41
test	negative	4	37	41
		21	61	82

Wong 2010 training group (threshold=>9 for normal ALT group and >12 for elevated ALT group)

		positive	negative	
Index	positive	40	1	41
test	negative	34	81	115
		74	82	156

Wong 2010 validation group (threshold=>9 for normal ALT group and >12 for elevated ALT group)

		positive	negative	
Index	positive	9	8	17
test	negative	12	53	65
		21	61	82

Kim 2012B (threshold > 10.2kPa: optimal cutoff), calculated from numbers of patients positive and negative on reference standard and sensitivity (86.3%) and specificity (90.4%)

		Positive F3-F4	Negative F0-F2	
Index	positive	98	8	106
test	negative	16	72	88
		114	80	194

O.2.3 Cirrhosis

Cardoso 2012 (threshold > 11.0kPa - standard), taken from2x2 table in the paper

		Positive F3-F4	Negative F0-F2	
Index	positive	12	19	31
test	negative	4	167	171
		16	186	202

Castera 2009 (threshold>9.6kPa – optimised cut-off); calculated from numbers of patients positive and negative on reference standard and sensitivity (87%) and specificity (80%)

		positive	negative	
Index	positive	13	9	22
test	negative	2	36	38
		15	45	60

Castera 2009 (threshold>11.0kPa – standard cut-off); calculated from numbers of patients positive and negative on reference standard and sensitivity (73%) and specificity (87%)

		positive	negative	
Index	positive	11	6	17
test	negative	4	39	43
		15	45	60

Chan 2009 (threshold=8.4kPa)

		positive	negative	
Index	positive	39	46	85
test	negative	1	75	76
		40	121	161

Chan 2009 (threshold=9kPa)

		positive	negative	
Index	positive	39	30	69
test	negative	1	91	92
		40	121	161

Chan 2009 (threshold=13.4kPa)

		positive	negative	
Index	positive	24	8	32
test	negative	16	113	129
		40	121	161

Chen 2012 (threshold>10.4kPa – optimal likelihood ratio); calculated from numbers positive and negative on reference standard and text reporting the numbers of false negatives and test negatives; this did not agree with the calculated sensitivity and specificity.

		positive	negative	
Index	positive	70	70	140
test	negative	4	171	175
		74	241	315

Chen 2012 (threshold>22.3kPa)

		positive	negative	
Index	positive	22	7	29
test	negative	52	234	286
		74	241	315

Gaia 2011 (threshold>10.6kPa – optimal diagnostic accuracy); calculated from the numbers positive and negative on the reference standard, and the sensitivity (48%) and specificity (87%)

		positive	negative	
Index	positive	11	6	17
test	negative	11	42	53
		22	48	70

Kim 2009 (threshold>10.1kPa – optimal, maximising the sum of sensitivity and specificity); calculated from numbers positive and negative on the index test, number of true positives and sensitivity (76.1%) and specificity (81.0%)

		positive	negative	
Index	positive	51	12	63
test	negative	16	51	67
		67	63	130

Kim 2012B (threshold > 14.1kPa: optimal cutoff), calculated from numbers of patients positive and negative on reference standard and sensitivity (84.0%) and specificity (84.9%)

		Positive F4	Negative F0-F3	
Index	positive	63	18	81
test	negative	12	101	113
		75	119	194

Marcellin 2009 (threshold>11kPa - optimal sensitivity+specificity); calculated from the numbers positive and negative on the reference standard, and the sensitivity (93%) and specificity (87%))

		positive	negative	
Index	positive	13	21	34
test	negative	1	138	139
		14	159	173

Marcellin 2009 (threshold>18.2kPa – optimal, based on diagnostic accuracy); calculated from the numbers positive and negative on the reference standard, and the sensitivity (57%) and specificity (97%)

		positive	negative	
Index	positive	8	5	13
test	negative	6	154	160
		14	159	173

Myers 2010 (threshold>11.1kPa – optimal cut-off); calculated from the number positive on the reference standard, the total number of patients and the sensitivity (100%) and specificity (92%)

		positive	negative	
Index	positive	3	5	8
test	negative	0	60	60
		3	65	68

Vigano2011A training cohort (threshold >9.4kPa – optimal); calculated from numbers given in the text.

		Positive F4	Negative F0-F3	
Index	positive	20	19	39
test	negative	0	86	86
		20	105	125

Zhu 2011 (threshold≥13.8kPa - optimal); from 2x2 table in the paper

		positive	negative	
Index	positive	27	13	40
test	negative	2	133	135
		29	146	175

Lesmana 2011 and Verveer 2012 did not report on cirrhosis.

O.3 APRI

O.3.1 Fibrosis

Castera 2011 inactive carriers and HBeAg negative CHB; calculated from numbers of patients positive and negative on reference standard and sensitivity and specificity.

		positive	negative	
Index	≥1.5	6	0	6
test	>0.5-1.5	21	6	27
	<0.5	17	10	27
		44	16	60

Lesmana 2011 (threshold>0.235 - optimal); calculated from the number of patients positive on the reference standard, the total number of patients and the sensitivity (64.4%) and the specificity (70.5%).

		positive	negative	
Index	positive	47	13	60
test	negative	26	31	57
		73	44	117

Liu 2011 (threshold>0.3 – optimal threshold); calculated from the numbers positive and negative on the reference standard, and the sensitivity (69.3%) and specificity (71.7%)

		positive	negative	
Index	positive	149	115	264
test	negative	66	293	359
		215	408	623

Raftopoulos 2012 (thresholds 0.5 and 1.5); calculated from total number of patients, the numbers above the thresholds and the positive and negative predictive values.

		positive	negative	
Index	>1.5	17	2	19
test	>0.5-1.5	31	28	59
	<0.5	13	55	68
		61	85	146

Raftopoulos 2012 (threshold according to the highest Youden index >0.55; calculated from total number of patients, the numbers above the thresholds and the positive and negative predictive values.

		positive	negative	
Index	positive	43	25	68
test	negative	18	60	78
		61	85	146

Sebastiani 2007; calculated from numbers with fibrosis and total number of patients, and sensitivities and specificities

		positive	negative	
Index	>1.5	20	2	22
test	>0.5-1.5	33	3	36
	<0.5	22	30	52
		75	35	110

Sebastiani 2011 (threshold>1.5 – standard; calculated from number with and without fibrosis, and sensitivity (36.9%) and specificity (98%)

		positive	negative	
Index	positive	54	2	56
test	negative	92	105	197
		146	107	253

Seto 2011; calculated from numbers with fibrosis and total number of patients, and sensitivities and specificities. Classification of ”significant fibrosis” was F3 or more on the Ishak Fibrosis score.

		positive	negative	
Index	>1.5	14	10	24
test	>0.5-1.5	28	39	67
	<0.5	5	33	38
		47	82	129

Shin 2008 ; calculated from numbers of patients positive and negative on the reference standard, and the sensitivities and specificities reported at various thresholds

		positive	negative	
Index	>2.0	83	14	97
test	>1.5-2.0	23	6	29
	>1.4-1.5	5	1	6
	>1.0-1.4	12	20	32
	>0.5-1.0	14	40	54
	≤0.5	4	42	46
		141	123	264

Wu 2010; calculated from numbers of patients positive and negative on reference standard; numbers of patients and sensitivities and specificities.

		positive	negative	
Index	>1.5	15	9	24
test	>0.5-1.5	12	21	33
	<0.5	5	16	21
		32	46	78

Zhang 2008 (threshold>1.5), calculated from numbers of patients positive and negative on the reference standard and sensitivity (44.7%) and specificity (84.3%)

		positive	negative	
Index	positive	36	9	45
test	negative	44	48	92
		80	57	137

Zhu 2010 (threshold>0.5 – optimal – maximum sensitivity and specificity); calculated from numbers positive and negative on the reference standard and the number of true negatives and the NPV.

		positive	negative

Index	positive	70	16	8662
test	negative	9	80	89
		79	96	175

Chen 2012, Kim 2010A, Wai 2006, Wong 2010 and Yilmaz 2011 did not report on fibrosis.

O.3.2 Severe fibrosis

Lesmana 2011 (threshold>0.27 - optimal); calculated from the number of patients positive on the reference standard, the total number of patients and the sensitivity (72.4%) and the specificity (71.6%).

		positive	negative	
Index	positive	20	25	46
test	negative	8	64	71
		28	89	117

O.3.3 Cirrhosis

Castera 2011 (threshold>1.0); calculated from numbers of patients positive and negative on reference standard and assuming sensitivity and specificity are given for >1.0 threshold and not <1.0 as stated (47% and 80% respectively)

		positive	negative	
Index	≥2.0	2	2	4
test	>1.0-2.0	5	7	12
	≤ 1.0	8	36	44
		15	45	60

Raftopoulos 2012 (threshold 1.0 - standard); calculated from total number of patients, the number above the threshold and the positive and negative predictive values (plus some trial and error to match the sensitivity and specificitiy.

		positive	negative	
Index	positive	8	26	33
test	negative	4	109	113
		12	134	146

Raftopoulos 2012 (threshold according to the highest Youden index >0.81); calculated from total number of patients, the numbers above the thresholds and the positive and negative predictive values.

		positive	negative	
Index	positive	9	34	43
test	negative	3	100	103
		12	134	146

Sebastiani 2007 (threshold=2.0)

		positive	negative	
Index	positive	9	13	22
test	negative	13	75	88
		22	88	110

Sebastiani 2011 (threshold≥ 2.0); calculated from number with and without cirrhosis, and sensitivity (20.6%) and specificity (83.6%).
NB the reported PPV (16.7%) and NPV (77.9%) do not agree completely with this 2x2 table (20.9 and 82.9% respectively)

		Ref Standard positive	negative	
Index	positive	9	34	43
test	negative	36	174	210
		45	208	253

Zhu 2011 (threshold≥1.0 - optimal); from 2X2 table in the paper

		positive	negative	
Index	positive	22	45	67
test	negative	7	101	108
		29	146	175

Chen 2012 and Kim 2010A did not report 2x2 data for APRI; Lesmana 2011 and Liu 2011, Seto 2011, Shin 2008, Wai 2006, Wong 2010,Wu 2010 and Zhang 2008 did not report on cirrhosis

O.4 Transient elastography + APRI

O.4.1 Fibrosis

Lesmana 2011 (threshold APRI 0.235 and TE 5.85kPa); calculated from the number of patients positive on the reference standard, the total number of patients and the sensitivity (67.1%) and the specificity (61.4%).

		positive	negative	
Index	positive	49	17	66
test	negative	24	27	51
		73	44	117

O.4.2 Severe fibrosis

Lesmana 2011

		positive	negative	
Index	positive	20	25	46
test	negative	8	64	71
		28	89	117

O.5 Actitest

O.5.1 Necroinflammatory activity

Poynard (threshold=0.52)

		positive	negative	
Index	positive	261	35	296
test	negative	113	53	166
		374	88	462

1 Ahn SH, Park JY, Lee H-J, Tak WY, Um SH, Kim DY et al. Prospective randomized trial of switching to entecavir (ETV) in chronic hepatitis B patients with suboptimal virologic response to lamivudine (LVD): Interim analysis at 48 weeks. Journal of Gastroenterology and Hepatology. 2009; 24:A177

2 An P, Bian L, Yin B, Lv D, Cao Y-X, Wu X. Risk factors of gene-resistant mutations in different nucleosides. Hepato-Gastroenterology. 2012; 59(113):228-230

3 Berg T, Marcellin P, Zoulim F, Moller B, Trinh H, Chan S et al. Tenofovir is effective alone or with emtricitabine in adefovir-treated patients with chronic-hepatitis B virus infection. Gastroenterology. 2010; 139(4):1207-1217

4 Brown RE, De CE, Colin X, Antonanzas F, Iloeje UH. Hepatitis B management costs in France, Italy, Spain, and the United Kingdom. Journal of Clinical Gastroenterology. 2004; 38(10 Suppl.):S169-S174

5 Carman WF, Jacyna MR, Hadziyannis S, Karayiannis P, McGarvey MJ, Makris A et al. Mutation preventing formation of hepatitis B e antigen in patients with chronic hepatitis B infection. Lancet. 1989; 2(8663):588-591

6 Carreno V, Marcellin P, Hadziyannis S, Salmeron J, Diago M, Kitis GE et al. Retreatment of chronic hepatitis B e antigen-positive patients with recombinant interferon alfa-2a. Hepatology. 1999; 30(1):277-282

7 Chang TT, Gish RG, de Man R, Gadano A, Sollano J, Chao YC et al. A comparison of entecavir and lamivudine for HBeAg-positive chronic hepatitis B. New England Journal of Medicine. 2006; 354(10):1001-1010

8 Chang TT, Lai CL, Chien RN, Guan R, Lim S-G, Lee C-M et al. Four years of lamivudine treatment in Chinese patients with chronic hepatitis B. Journal of Gastroenterology and Hepatology. 2004; 19(11):1276-1282

9 Charman, S, Copley, L, and Van der Meulen, J. UK Liver Transplant Audit. UK. Royal College of Surgeons & The London School of Hygeine and Tropical Medicine, 2010 Available from: http://www.rcseng.ac.uk/surgeons/research/surgical-research/docs/uk-liver-transplant-audit-report-2011

10 Chen CJ, Iloeje UH, Yang HI. Long-term outcomes in hepatitis B: the REVEAL-HBV study. Clinics in Liver Disease. 2007; 11(4):797-816, viii

11 Colonno RJ, Rose R, Baldick CJ, Levine S, Pokornowski K, Yu CF et al. Entecavir resistance is rare in nucleoside naive patients with hepatitis B. Hepatology. 2006; 44(6):1656-1665

12 Cooksley WG, Piratvisuth T, Lee SD, Mahachai V, Chao YC, Tanwandee T et al. Peginterferon alpha-2a (40 kDa): an advance in the treatment of hepatitis B e antigen-positive chronic hepatitis B. Journal of Viral Hepatitis. 2003; 10(4):298-305

13 Crowley S, Tognarini D, Desmond P, Lees M, Saal G. Introduction of lamivudine for the treatment of chronic hepatitis B: expected clinical and economic outcomes based on 4-year clinical trial data. Journal of Gastroenterology and Hepatology. 2002; 17(2):153-164

14 Crowley SJ, Tognarini D, Desmond P, V, Lees M. Cost-effectiveness analysis of lamivudine for the treatment of chronic hepatitis B. Pharmacoeconomics. 2000; 17(5):409-427

15 Curtis L. Unit costs of health and social care. Canterbury: Personal Social Services Reseach Unit, University of Kent; 2011. Available from: http://www.pssru.ac.uk/pdf/uc/uc2010/uc2010.pdf

16 Dakin H, Bentley A, Dusheiko G. Cost-utility analysis of tenofovir disoproxil fumarate in the treatment of chronic hepatitis B. Value in Health. 2010; 13(8):922-933

17 de Franchis R, Meucci G, Vecchi M, Tatarella M, Colombo M, Del NE et al. The natural history of asymptomatic hepatitis B surface antigen carriers. Annals of Internal Medicine. UNITED STATES 1993; 118(3):191-194

18 Delaney W. Progress in the treatment of chronic hepatitis B: long-term experience with adefovir dipivoxil. Journal of Antimicrobial Chemotherapy. 2007; 59:827-832

19 Department of Health. NHS reference costs 2009-2010. 2011. [Last accessed: 1 August 2011]

20 Dias, S, Sutton, AJ, Welton, NJ, and Ades, AE. Nice DSU technical support document 3: heterogeneity: subgroups, meta-regression, bias and bias-adjustment. UK. Decision Support Unit, ScHARR, 2011 Available from: http://www.nicedsu.org.uk/TSD3%20Heterogeneity.final%20report.08.05.12.pdf

21 Dienstag JL, Cianciara J, Karayalcin S, Kowdley KV, Willems B, Plisek S et al. Durability of serologic response after lamivudine treatment of chronic hepatitis B. Hepatology. United States 2003; 37(4):748-755

22 Dienstag JL, Schiff ER, Wright TL, Perrillo RP, Hann HW, Goodman Z et al. Lamivudine as initial treatment for chronic hepatitis B in the United States. New England Journal of Medicine. 1999; 341(17):1256-1263

23 European Association for the Study of the Liver. EASL Clinical Practice Guidelines: management of chronic hepatitis B. Journal of Hepatology. 2009; 50(2):227-242

24 Fattovich G. Natural history and prognosis of hepatitis B. Seminars in Liver Disease. 2003; 23(1):47-58

25 Fattovich G. Natural history of hepatitis B. Journal of Hepatology. 2003; 39 Suppl 1:S50-S58

26 Fattovich G, Giustina G, Schalm SW, Hadziyannis S, Sanchez-Tapias J, Almasio P et al. Occurrence of hepatocellular carcinoma and decompensation in western European patients with cirrhosis type B. Hepatology. 1995; 21(1):77-82

27 Fleurence RL, Hollenbeak CS. Rates and probabilities in economic modelling: transformation, translation and appropriate application. Pharmacoeconomics. 2007; 25(1):3-6

28 Funk ML, Rosenberg DM, Lok ASF. World-wide epidemiology of HBeAg-negative chronic hepatitis B and associated precore promoter variants. Journal of Viral Hepatitis. 2002; 9:52-61

29 Gish RG, Lok AS, Chang T, de Man RA, Gadano A, Sollano J et al. Entecavir Therapy for up to 96 Weeks in Patients With HBeAg-Positive Chronic Hepatitis B. Gastroenterology. 2007; 133(5):1437-1444

30 Gish RG, Trinh H, Leung N, Chan FK, Fried MW, Wright TL et al. Safety and antiviral activity of emtricitabine (FTC) for the treatment of chronic hepatitis B infection: a two-year study. Journal of Hepatology. 2005; 43(1):60-66

31 Hadziyannis SJ, Papatheodoridis GV, Dimou E, Laras A, Papaioannou C. Efficacy of long term lamivudine monotherapy in patients with hepatitis B e antigen-negative hepatitis B. Hepatology. 2000; 32(4):847-851

32 Hadziyannis SJ, Tassopoulos NC, Heathcote EJ, Chang TT, Kitis G, Rizzetto M et al. Long-term therapy with adefovir dipivoxil for HBeAg-negative chronic hepatitis B. New England Journal of Medicine. 2005; 352(26):2673-2681

33 Hadziyannis SJ, Tassopoulos NC, Heathcote EJ, Chang TT, Kitis G, Rizzetto M et al. Long-term therapy with adefovir dipivoxil for HBeAg-negative chronic hepatitis B for up to 5 years. Gastroenterology. 2006; 131(6):1743-1751

34 Heathcote EJ, Marcellin P, Buti M, Gane E, de Man RA, Krastev Z et al. Three-year efficacy and safety of tenofovir disoproxil fumarate treatment for chronic hepatitis B. Gastroenterology. 2011; 140(1):132-143

35 Hsu YS, Chien RN, Yeh CT, Sheen IS, Chiou HY, Chu CM et al. Long-term outcome after spontaneous HBeAg seroconversion in patients with chronic hepatitis B. Hepatology. 2002; 35(6):1522-1527

36 Hui CK, Lie A, Au WY, Ma SY, Leung YH, Zhang HY et al. Effectiveness of prophylactic anti-HBV therapy in allogeneic hematopoietic stem cell transplantation with HBsAg positive donors. American Journal of Transplantation. 2005; 5(6):1437-1445

37 Iloeje UH, Yang HI, Jen CL, Su J, Wang LY, You SL et al. Risk and predictors of mortality associated with chronic hepatitis B infection. Clinical Gastroenterology and Hepatology. 2007; 5(8):921-931

38 Joint Formulary Committee. British National Formulary (BNF). 63 edition. London: British Medical Association and The Royal Pharmaceutical Society of Great Britain; 2012. Available from: http://www.bnf.org.uk

39 Kanwal F, Farid M, Martin P. Treatment alternatives for hepatitis B cirrhosis: a cost-effectiveness analysis. American Journal of Gastroenterology. 2006; 101(9):2076-2089

40 Kirkwood B, Sterne J. Essentials of Medical Statistics. 2nd edition. Blackwell; 2003

41 Korenman J, Baker B, Waggoner J, Everhart JE, Di Bisceglie AM, Hoofnagle JH. Long-term remission of chronic hepatitis B after alpha-interferon therapy. Annals of Internal Medicine. 1991; 114(8):629-634

42 Krogsgaard K. The long-term effect of treatment with interferon-alpha 2a in chronic hepatitis B. Journal of Viral Hepatitis. 1998; 5(6):389-397

43 Lai CL, Shouval D, Lok AS, Chang TT, Cheinquer H, Goodman Z et al. Entecavir versus lamivudine for patients with HBeAg-negative chronic hepatitis B. New England Journal of Medicine. 2006; 354(10):1011-1020

44 Lai C-L, Dienstag JL, Schiff E, Leung NW, Atkins M, Hunt C et al. Prevalence and clinical correlates of YMDD variants during lamivudine therapy for patients with chronic hepatitis B. Clinical Infectious Diseases. 2003; 36:687-689

45 Lampertico P. Entecavir versus lamivudine for HBeAg positive and negative chronic hepatitis B. Journal of Hepatology. 2006; 45(3):457-460

46 Lau DT, Everhart J, Kleiner DE, Park Y, Vergalla J, Schmid P et al. Long-term follow-up of patients with chronic hepatitis B treated with interferon alfa. Gastroenterology. 1997; 113(5):1660-1667

47 Lau GK, Piratvisuth T, Luo KX, Marcellin P, Thongsawat S, Cooksley G et al. Peginterferon alfa-2a, lamivudine, and the combination for HBeAg-positive chronic hepatitis B. New England Journal of Medicine. 2005; 352(26):2682-2695

48 Lavanchy D. Epidemiology of hepatitis B. In: Thomas HC, Lemon S, Zuckerman A (eds), Viral hepatitis, 3rd edition. Oxford: Blackwell, 2007

49 Leung NW, Lai CL, Chang TT, Guan R, Lee CM, Ng KY et al. Extended lamivudine treatment in patients with chronic hepatitis B enhances hepatitis B e antigen seroconversion rates: results after 3 years of therapy. Hepatology. 2001; 33(6):1527-1532

50 Levy AR, Kowdley K, V, Iloeje U, Tafesse E, Mukherjee J, Gish R et al. The impact of chronic hepatitis B on quality of life: a multinational study of utilities from infected and uninfected persons. Value in Health. 2008; 11(3):527-538

51 Liaw YF, Raptopoulou-Gigi M, Cheinquer H, Sarin SK, Tanwandee T, Leung N et al. Efficacy and safety of entecavir versus adefovir in chronic hepatitis B patients with hepatic decompensation: a randomized, open-label study. Hepatology. 2011; 54(1):91-100

52 Liaw YF, Sheen IS, Lee CM, Akarca US, Papatheodoridis GV, Suet-Hing WF et al. Tenofovir disoproxil fumarate (TDF), emtricitabine/TDF, and entecavir in patients with decompensated chronic hepatitis B liver disease. Hepatology. 2011; 53(1):62-72

53 Liaw YF, Sung JJ, Chow WC, Farrell G, Lee CZ, Yuen H et al. Lamivudine for patients with chronic hepatitis B and advanced liver disease. New England Journal of Medicine. 2004; 351(15):1521-1531

54 Liaw YF, Tai DI, Chu CM, Pao CC, Chen TJ. Acute exacerbation in chronic type B hepatitis: comparison between HBeAg and antibody-positive patients. Hepatology. 1987; 7(1):20-23

55 Locarnini S. Primary resistance, multidrug resistance, and cross-resistance pathways in HBV as a consequence of treatment failure. Hepatology International. 2008; 2:147-151

56 Lok AS, Lai CL. Acute exacerbations in Chinese patients with chronic hepatitis B virus (HBV) infection. Incidence, predisposing factors and etiology. Journal of Hepatology. 1990; 10(1):29-34

57 Lok AS, McMahon BJ. Chronic hepatitis B. Hepatology. 2007; 45(2):507-539

58 Lok AS, Zoulim F, Locarnini S, Bartholomeusz A, Ghany MG, Pawlotsky JM et al. Antiviral drug-resistant HBV: standardization of nomenclature and assays and recommendations for management. Hepatology. 2007; 46(1):254-265

59 Marcellin P, Chang TT, Lim SG, Tong MJ, Sievert W, Shiffman ML et al. Adefovir dipivoxil for the treatment of hepatitis B e antigen-positive chronic hepatitis B. New England Journal of Medicine. 2003; 348(9):808-816

60 Marcellin P, Heathcote EJ, Buti M, Gane E, de Man RA, Krastev Z et al. Tenofovir disoproxil fumarate versus adefovir dipivoxil for chronic hepatitis B. New England Journal of Medicine. 2008; 359(23):2442-2455

61 Marcellin P, Heathcote EJ, Corsa A, Liu Y, Miller MD, Kitrinos KM. No detectable resistance to tenofovir disoproxil fumarate (TDF) following up to 240 weeks of treatment in patients with HBeAg+ and HBeAg-chronic hepatitis B virus infection. Hepatology. 2011; 54:480A

62 Mukaide M, Tanaka Y, Shin-I T, Yuen M-F, Kurbanov F, Yokosuka O et al. Mechanism of entecavir resistance of hepatitis B virus with viral breakthrough as determined by long-term clinical assessment and molecular docking simulation. Antimicrobial Agents & Chemotherapy. 2010;882-889

63 National Institute for Health and Clinical Excellence. Guide to the methods of technology appraisal
NICE2008A. London: National Institute for Health and Clinical Excellence; 2008. Available from: http://www.nice.org.uk/media/B52/A7/TAMethodsGuideUpdatedJune2008.pdf

64 National Institute for Health and Clinical Excellence. The guidelines manual
NICE2009. London: National Institute for Health and Clinical Excellence; 2009. Available from: http://www.nice.org.uk/aboutnice/howwework/developingniceclinicalguidelines/clinicalguidelinedevelopmentmethods/GuidelinesManual2009.jsp

65 NHS Blood and Transplant. Transplant activity in the UK. UK. NHS Blood and Transplant, 2010

66 Oo AM, Wei L, Young DY, Yin-Mei L, Kieron L, Olszyna DP et al. Efficacy and safety of entecavir monotherapy versus lamivudine and adefovir in chronic Hepatitis B. Hepatology International. 2012; 6(1):114

67 Organisation for Economic Co-operation and Development (OECD). Purchasing power parities (PPP). 2011. Available from: http://www.oecd.org/std/ppp [Last accessed: 1 August 2011]

68 Papatheodoridis GV, Chrysanthos N, Hadziyannis E, Cholongitas E, Manesis EK. Longitudinal changes in serum HBV DNA levels and predictors of progression during the natural course of HBeAg-negative chronic hepatitis B virus infection. Journal of Viral Hepatitis. England 2008; 15(6):434-441

69 Papatheodoridis GV, Dimou E, Dimakopoulos K, Manolakopoulos S, Rapti I, Kitis G et al. Outcome of hepatitis B e antigen-negative chronic hepatitis B on long-term nucleos(t)ide analog therapy starting with lamivudine. Hepatology (Baltimore, Md). 2005; 42(1):121-129

70 Patterson SJ, George J, Strasser SI, Lee AU, Sievert W, Nicoll AJ et al. Tenofovir disoproxil fumarate rescue therapy following failure of both lamivudine and adefovir dipivoxil in chronic hepatitis B. Gut. 2011; 60(2):247-254

71 Perrillo R, Hann HW, Mutimer D, Willems B, Leung N, Lee WM et al. Adefovir dipivoxil added to ongoing lamivudine in chronic hepatitis B with YMDD mutant hepatitis B virus. Gastroenterology. 2004; 126(1):81-90

72 Rapti I, Dimou E, Mitsoula P, Hadziyannis SJ. Adding-on versus switching-to adefovir therapy in lamivudine-resistant HBeAg-negative chronic hepatitis B. Hepatology. 2007; 45(2):307-313

73 Reijnders JG, Perquin MJ, Zhang N, Hansen BE, Janssen HL. Nucleos(t)ide analogues only induce temporary hepatitis B e antigen seroconversion in most patients with chronic hepatitis B. Gastroenterology. 2010; 139(2):491-498

74 Rizzetto M, Tassopoulos NC, Goldin RD, Esteban R, Santantonio T, Heathcote EJ et al. Extended lamivudine treatment in patients with HBeAg-negative chronic hepatitis B. Journal of Hepatology. 2005; 42(2):173-179

75 Schiff ER, Dienstag JL, Karayalcin S, Grimm IS, Perrillo RP, Husa P et al. Lamivudine and 24 weeks of lamivudine/interferon combination therapy for hepatitis B e antigen-positive chronic hepatitis B in interferon nonresponders. Journal of Hepatology. 2003; 38(6):818-826

76 Shepherd J, Jones J, Takeda A, Davidson P, Price A. Adefovir dipivoxil and pegylated interferon alfa-2a for the treatment of chronic hepatitis B: a systematic review and economic evaluation. Health Technology Assessment. 2006; 10(28):1-183

77 Singal AK, Fontana RJ. Oral antiviral agents reduce the risk of hepatocellular carcinoma in patients with chronic hepatitis B: systematic review and meta-analysis. Hepatology. 2011; 54:1016A

78 Snow-Lampart A, Chappell B, Curtis M, Zhu Y, Myrick F, Schawalder J et al. No resistance to tenofovir disoproxil fumarate detected after up to 144 weeks of therapy in patients monoinfected with chronic hepatitis B virus. Hepatology. 2011; 53(3):763-773

79 Snow-Lampart A, Kitrinos K, Chappell B, Myrick F, Schawalder J, Heathcote EJ et al. No resistance to tenofovir disoproxil fumarate (TDF) detected following 192 weeks of treatment in subjects with chronic hepatitis B virus. Hepatology International. 2011; 5(1):11

80 Tenney DJ, Rose RE, Baldick CJ, Pokornowski KA, Eggers BJ, Fang J et al. Long-term monitoring shows hepatitis B virus resistance to entecavir in nucleoside-naive patients is rare through 5 years-of therapy. Hepatology. 2009; 49(5):1503-1514

81 TreeAge Software Inc.

82 van Bommel F, de Man RA, Wedemeyer H, Deterding K, Petersen J, Buggisch P et al. Long-term efficacy of tenofovir monotherapy for hepatitis B virus-infected patients after failure of nucleoside/nucleotide analogues. Hepatology. 2010; 51:73-80

83 Veenstra DL, Sullivan SD, Dusheiko GM, Jacobs M, Aledort JE, Lewis G et al. Cost-effectiveness of peginterferon alpha-2a compared with lamivudine treatment in patients with HBe-antigen-positive chronic hepatitis B in the United Kingdom. European Journal of Gastroenterology and Hepatology. 2007; 19(8):631-638

84 Wilt TJ, Shamliyan T, Shaukat A, Taylor BC, MacDonald R, Yuan JM et al. Management of chronic hepatitis B. Evidence Report/Technology Assessment. United States 2008;(174):1-671

85 Wong GLH, Wong VWS, Choi PCL, Chan AWH, Chim AML, Yiu KKL et al. On-treatment monitoring of liver fibrosis with transient elastography in chronic hepatitis B patients. Antiviral Therapy. 2011; 16(2):165-172

86 Wong JB, Koff RS, Tine F, Pauker SG. Cost-effectiveness of interferon-alpha2b treatment for hepatitis B e antigen-positive chronic hepatitis B. Annals of Internal Medicine. 1995; 122(9):664-675

87 Wong VWS, Chan HLY, Wong ML, Tam JSL, Leung NWY. Clinical course after stopping lamivudine in chronic hepatitis B patients with lamivudine-resistant mutants. Alimentary Pharmacology and Therapeutics. 2004; 19(3):323-329

88 Wong WL, Woo G, Heathcote EJ, Krahn M. Cost effectiveness of screening immigrants for hepatitis B. Liver International. 2011;1179-1190

89 Woo G, Tomlinson G, Yim C, Lilly L, Therapondos G, Wong DK et al. Health state utilities and quality of life in patients with hepatitis B. Canadian Journal of Gastroenterology. 2012; 26(7):445-451

90 Wright M, Grieve R, Roberts J, Main J, Thomas HC. Health benefits of antiviral therapy for mild chronic hepatitis C: randomised controlled trial and economic evaluation. Health Technol Assess. 2006; 10(21):1-113, iii

91 Zoulim F, Locarnini S. Hepatitis B virus resistance to nucleos(t)ide anaolgues. Gastroenterology. 2009; 137:1593-1608

92 Zoulim F, Locarnini S. Management of treatment failure in chronic hepatitis B. Journal of Hepatology. 2012; 56 Suppl. 1:S112-S122